# Practical Talks on Electricity

Jan. 16

BY WILLIAM BAXTER, JR.



PART I.

Principles and Construction of Dynamos and Switchboards.

THE ENGINEER PUBLISHING CO.
355 Dearborn St., Chicago.
1905.

## Table of Contents.

# Practical Talks on Electricity.

## CHAPTER I.

### Nature of Electricity and Magnetism.

IN this electric age the engineer who understands the principles upon which electric machines act well enough to be able to doctor them when an unimportant disorder interferes with perfect action, or who can determine the nature of the required repairs, when these are of such a character that outside assistance is necessary, has a great advantage over his brothers whose information is limited strictly to the action of the steam engine. While this is the state of things at the present time, it looks very much as if in the near future no man will be looked upon as a first-class engineer who is not fully competent to take care of electric as well as steam machinery. Electric machines are very common in engine-rooms at the present time, and before many years roll by it may be exceptional to find a place where they are absent. The natural conclusion from this inevitable course of events is that the man who desires to keep up with the times and be in a position to command first-class pay, should familiarize himself with the new class of machinery that is intrusted to his care.

Many men are deterred from following this course through the mistaken notion that electricity is a profound mystery that can only be mastered by those who have had the benefits of a technical education. While this conclusion may be true, in so far as it refers to those who have to design such machines, it is not so, with reference to those who have to take care of them. *The operation of* electric machines is as simple as that of those *operated by steam,* and, if anything, more simple; but to be

able to master the subject, it is necessary to get at it in the right way.

Two things are absolutely necessary to attain success—one is to get rid, at once, of the notion that there is any mystery about electricity; and the other, to begin at the foot of the ladder and climb up. The ladder, however, is a short one, as any one will realize who follows these pages carefully, as in them it is proposed to present the subject entirely free from all frills and flourishes, and to demonstrate the correctness of the foregoing statement, that electric machinery is, if anything, simpler and more easily understood than that operated by steam. After the truth of this statement has been fully demonstrated, we will proceed to show the various ways in which electric machines are likely to get out of order, how to determine the character of a defect when it occurs and how to remedy the difficulty when a remedy is possible.

Electricity is a force of nature. Magnetism is another force of nature. Some people say that we do not know what electricity and magnetism are, others are not willing to admit that this assertion is true; but it matters little whether or not we know absolutely what they are, so long as we know what they will do and the conditions under which they do it. When it comes down to a fine point, we do not know what any kind of force is; we know only what it will do. If a man pushes against the back of a wagon, he exerts a force, which we call a muscular force. We do not know just what a muscular force is, but we do know that, if the wagon is not too heavy, the man will move it—that is, the muscular force will move it. We cannot see the force, and we cannot weigh it, but we can see its effects and can weigh them.

If we let steam into the cylinder of a steam engine, the piston will be moved, and we commonly explain this by saying that it is moved by the expansive force of the steam. This explanation, however, is not strictly correct, for the real force that does the work is the heat contained in the steam. The heat imparts to the steam its expansive force and this expansive force in turn moves the piston. We cannot see heat, nor do we know what it is, but we know what it will do. We know that through the agency of steam it will push the piston ahead of it. Even

if we said that the steam caused the piston to move, we would still have an invisible agent doing the work, for, as every one knows who has seen a glass steam engine working, steam is not visible until it has passed out of the exhaust pipe.

From these familiar examples we can see that power is de-

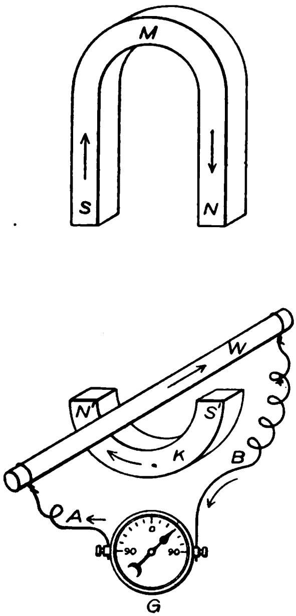


FIG. I.

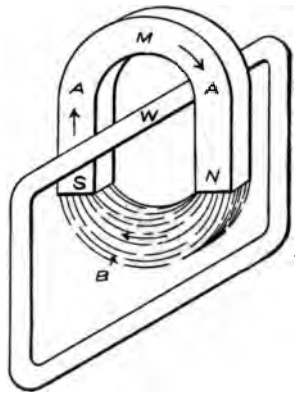


FIG. 2.

veloped by invisible forces, and we can further realize that these actions do not mystify us, simply because we are so accustomed to seeing them that all thought of mystery has disappeared, and the same will be the case with respect to the actions of electricity and magetism when we become as familiar with them.

There is an important relation between electricity and mag-

netism, and a thorough knowledge of it enables us to understand all the various actions, complicated or otherwise, that occur in the numerous forms of electric machines. This relation is, that magnetism either surrounds electric currents, or is surrounded by them. If a current of electricity is passed through a wire, the space surrounding the latter will instantly become charged with magnetism. If a wire whose ends are connected, is surrounded with magnetism, an electric current will be induced in the wire while the surrounding process continues. As soon as the process stops, the current will stop.

These actions can be better explained in connection with Fig. 1, in which *M* represents a magnet, *K* a piece of iron commonly called a keeper, *W* a piece of wire, *G* an instrument for measuring electric current, called a galvanometer, and *A* and *B* small wires connecting the instrument with wire *W*. When all the parts are stationary, the needle of the galvanometer will point upward, thus indicating that there is no current flowing in the wire *W*. If now we allow the magnet *M* to descend, until it rests upon the keeper *K*, we shall find that while *M* is descending, the needle in *G* will be deflected to one side or the other, according to the direction in which the current generated in *W* passes through the instrument. As long as the magnet rests upon *K*, the needle of the galvanometer will point upward, as the current is only generated while the magnet is moving downward. When the magnet is above the wire *W*, as in the figure, there is no magnetism around it and no electric current flowing through it. When *M* comes in contact with *K*, the latter virtually becomes a part of the magnet, hence the magnetism has been made to surround the wire, and in this operation a current has been generated.

If we now raise the magnet to its original position, we shall find that the needle of the galvanometer will move in the opposite direction to that in which it did when the lowering took place, thus showing that when the magnet is lowered upon *K* a current is induced in *W* in one direction, and when the magnet is raised away from *K* a current is induced in *W* in the *opposite direction*. By considering these actions, we can see that in *the first case* we have surrounded the wire *W* with magnetism, *and in the second* case we have removed the magnetism.

If we have the proper instruments with which to make tests, we shall find that the power represented by the current generated when the magnet is lowered is the same as that generated when it is raised, and we shall also find that in the lowering process the magnet is attracted toward *K*, and that when it is raised its removal is resisted, and that in both cases the power represented is the same, that is, *M* and *K* are drawn together with a force that is just as great as that which resists their being separated. This action shows that the magnetism is simply a medium through which the mechanical force exerted in moving *M* to and from *K* is converted into electricity. If *M* and *K* were in a horizontal position, so that the weight of *M* would have nothing to do with its motion, it would be found that in moving toward *K*, the force required to effect the movement would be less than if *K* were absent, but in the movement away from *K* the force required would be greater than if *K* were absent, and the increase in one case would be equal to the decrease in the other.

The action described in the foregoing will take place whether *W* is a metallic wire, or any material that will conduct electricity, the only condition that must be fulfilled in every case is that the ends be connected, so as to form an endless path, for electricity will not flow in any other path. Furthermore, the action will take place without any regard to the manner in which *M* is moved toward *K*. Having found that this action is universal, and that there are no conditions under which it can be made to fail, the next thing that naturally suggests itself to the mind is, why does it take place? We may never find out why, but we can certainly build up some plausible explanation of the action, and, if, after years of investigation, we find that there is no case that cannot be fully accounted for by this explanation, we can with reason assume that the explanation is correct, although we may have no absolute proof that it is. Such an explanation of a natural phenomenon is called a theory.

The theory in relation to magnetism which is universally accepted at the present time is known as the lines of force theory, and as a proof of its correctness, it may be said that up to the present time no case has been found which it cannot fully explain. According to this theory, magnetism acts along certain

lines that are endless, and, in the case of a magnet of the form of *M*, pass through the metal from end to end, and then through the air from one end of the magnet to the other. This notion of the lines of force is illustrated in Fig. 2, in which the broken curved lines *B* passing from one end to the other of the magnet indicate the path of the lines of force. The simplest experiments will serve to convince us that this theory is a reasonable one. If we hold a piece of iron in the path *B*, we shall at once notice that it is strongly pulled either in the direction of *N* or *S*, depending on to which one it is the nearer. If instead of a piece of iron we use another magnet, the direction of the pull will depend upon which end we place in the path *B*. If it is the *N* end, the pull will be toward the *S* side.

Having accepted as correct the assumption that magnetism acts along certain lines, the position of which is determined by the shape of the magnet and the surrounding influences, we can easily conceive of magnetism as flowing in a stream from one end or pole of a magnet, to the other end, and then we can explain the induction of a current in a wire, when it is being surrounded by magnetism, by saying that whenever a closed conducting circuit cuts through a magnetic stream, an electric current will be induced in it. In this way we can see that the wire loop *W* in Fig. 2 had to cut through the stream *B* to attain its present position, and that when it cut through, an electric current was induced in it. We can also see that, as it is an impossibility for *W* to be removed from within the magnet without cutting stream B, another current will be induced when the removal takes place.

It should be remembered that the magnetic stream *B* has no real existence, that we only picture it as such to assist in explaining the actions of magnetism. It does no harm, however, to consider it as an actual stream, as much so as if it were a stream of water, and it is a natural tendency for the mind in time to get in the way of so regarding it.

In Fig. 2 we have shown *W* as a closed loop, so as to impress more clearly upon the mind that it is necessary to have for an electric current a continuous path in which it can flow. It is not necessary, however, that this path be made of metal, nor is it necessary that it be in the form of a small wire. Any form

of matter that will conduct electricity will serve as an electric circuit, and it may have any shape whatever, so long as it is an endless path. If it is very long and very thin, as when made of a great length of fine wire, it will offer a great resistance to the passage of the current, and therefore only a small amount of electricity will get through. On the other hand, if it is short and thick, the resistance opposing the flow of current will be very small, and as a consequence, the amount of electricity that will pass will be great.

From what has been said in the foregoing, it will be seen that, if it be desired to keep up a constant flow of electric current in the loop *W*, Fig. 2, we shall have to keep up a continuous cutting of the lines of force *B*— that is, *W* will have to be kept moving to and fro across the stream. We also see that each time the wire cuts into the magnetic loop, the current will be in one direction, and each time it cuts out the current will be in the opposite direction, hence we shall not have a continuous electric current, but one that will flow first in one direction and then in the other. Such currents are called alternating currents, and are now used extensively for the transmission of power. For electric lighting, and generally for the operation of electric motors, currents that flow always in the same direction are often used. The machinery used to generate and utilize alternating currents is more simple than that required for continuous currents, but the action of alternating currents is more difficult to understand, therefore, for the time being we will confine ourselves to a consideration of continuous current machinery.

We have shown by the aid of Figs. 1 and 2 that the act of surrounding an endless electric conducting path with magnetism causes an electric current to flow in it; the reverse operation, that is, the passage of an electric current through a conductor, causes a stream of magnetic lines of force to be developed around it. There is one important difference between the two actions, and that is, that while the surrounding of the conductor by magnetism induces a temporary current, which lasts only as long as the surrounding process continues, the passage of a current through the conductor causes a magnetic stream to surround it and remain as long as the current flows.

# CHAPTER II.

## ELECTROMAGNETIC FIELDS. FIELD COILS.

AS already stated, a wire through which an electric current is flowing is surrounded by magnetism. If we look at the wire from the end, we can picture the magnetic lines of force as flowing in circular paths, as is indicated in Fig. 3. The arrows in this figure show the direction in which the magnetic stream is supposed to flow, upon the supposition that the electric current in the wire is moving in a direction away from the observer. There is no good reason for assuming that

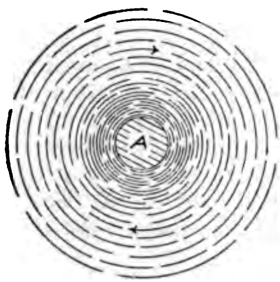


FIG. 3.

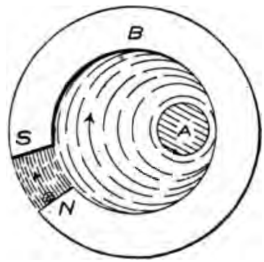


FIG. 4.

magnetism flows in the magnetic circuit, as electricity flows in the electric circuit, but it is quite common to speak as if it did, owing to the fact that a magnetic needle placed in the path of the lines of force will always turn its north end in the same direction with reference to the direction of the current of electricity flowing in the wire. In Fig 3, if the current were flowing downward through the wire, a magnetic needle placed where one of the arrows is drawn would turn its north end in the direction to which the arrow points.

If the wire carrying the current is surrounded wholly by air, *the magnetic* lines of force will be circles, as shown in Fig. 3, *and with the center* at the wire, but if there is any iron or steel

present, the shape of the lines of force will be changed. A piece of iron of the shape shown in Fig. 4, and so located, would change the position of the lines of force as indicated, for the reason that the iron is a much better conductor of magnetism than air, hence nearly all the lines of force will flow through it. This is shown in the figure by the greater density of the lines between the ends *N S* of the ring *B* than in the space within it. If the ring *B* were made solid, nearly all the magnetism would be confined to it; if it has a piece cut out of one side, as shown in the figure, a greater proportion of the lines of force will traverse the interior space, and the number will increase as the piece cut out is increased in size. If the wire *A*, through

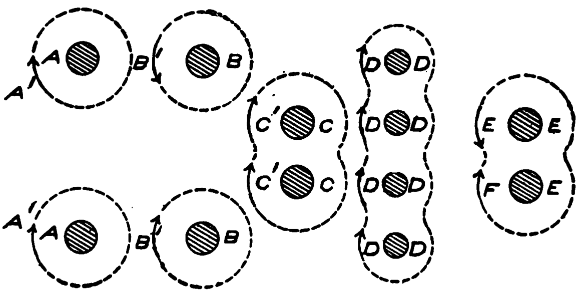


FIG. 5.

which the electric current is passed, is moved around within the iron ring, the only effect will be to change the path of the lines of force in the interior space, but those located in the iron will remain practically unchanged. As will be presently seen, if it were not for the fact that iron is a much better conductor of magnetism than air, it would be difficult, if not impossible to construct electric machines that could at all compare with those now in use.

If electric currents are passed through a number of wires, the lines of force surrounding each wire will be in the direction corresponding to its current, and if these wires are near each other the magnetism of one may assist that of the other, or it may act *in opposition to it*. In Fig. 5 a number of cases are

represented. Consider first the two wires *A A*, in both of which the electric currents are flowing in the same direction, as is indicated by the arrows *A′ A′*. In the two wires *B B* the currents are supposed to be flowing in opposition directions, and as a consequence the lines of force are oppositely directed. The effect of these two cases can be realized by comparing the wires *C C* and *E E*. In these two diagrams the wires are drawn close enough together to show the effect of the lines of force upon one another. In the case *C C*, the two sets of lines can join and flow together around the two wires forming one single path, but, in the case *E E*, the lines meet each other end on, and as a result they neutralize each other, hence, if in the two wires the electric currents flow in the same direction, the effect is to increase the magnetic force, if they are placed together, because the lines of force of the two wires are added together. If, however, the electric currents in the two wires flow in opposite directions, the effect of placing them close together is to reduce the magnetic force, because one neutralizes the other.

In the first case, if the currents in both wires are equal, when the wires are placed side by side, the magnetism flowing around the two is twice as great as that flowing around each one when placed some distance apart. In the second case, if the currents in the two wires are equal, the effect of placing them side by side will be to completely destroy the magnetism, for the lines of force of one wire will be just sufficient to head off the lines of the other wire.

In the case of the four wires *D D D D*, if the electric currents in all are in the same direction, their magnetisms will help one another, and if they are placed side by side, the lines of force will join and pass around all the wires, as shown in the diagram. In these diagrams the lines of force are shown as curving in and out, between the wires, but as a matter of fact they would pass along in straight lines from wire to wire; the curved form has been shown so as to illustrate more clearly how the long lines surrounding all the wires are built up of the several small circles surrounding the individual wires.

*If the current* flowing in each one of the wires *D D D D* *is equal in strength* to the current flowing in the wires A A, *then it is self-evident* that the number of lines of force—that is,

the strength of the magnetism—around each of the *D* wires will be the same as that around each one of the *A* wires, and if such is the case, it is equally evident that as the lines that flow in the long path around all the *D* wires are the sum of all the lines in the paths around each wire, the lines of force surrounding the four wires are four times as many as around each single wire. From this we see at once that, by placing side by side a large number of wires and passing through all of them current flowing in the same direction, we can develop a strong stream

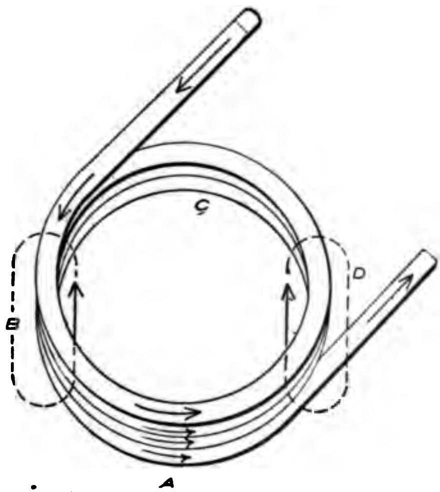


FIG. 6.

of magnetic lines of force. From Fig. 6 it is evident that all we have to do to accomplish this result is to wind a wire in the form of a coil, for then the current will pass through all its turns, flowing in the same direction. This is clearly shown by the arrows A, and the lines *B* and *D* which latter indicate the path of the lines of force on two sides of the coil. It will be understood that the lines of force will surround all sides of the coil. If we desire to increase the number of lines of force surrounding the coil *C* we can accomplish it either by increasing

the strength of the electric current flowing in the wires or by increasing the number of turns of wire in the coil.

As was shown in connection with Fig. 4, a mass of iron placed around a wire will divert the lines of force to itself, owing to the fact that it is a much better conductor of magnetism than air. Keeping this in mind, it is a simple step from the plain coil in Fig. 6 to the U-shaped magnet of Fig. 7, for this is

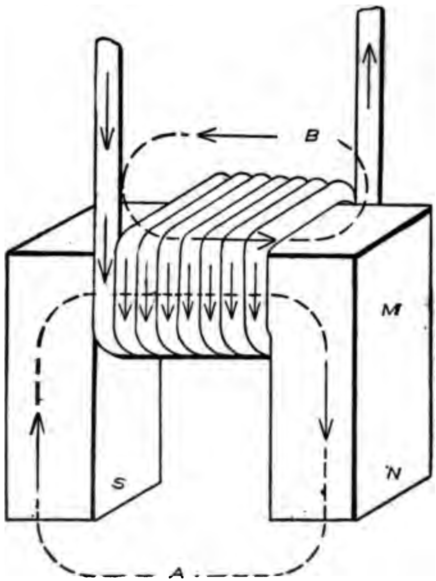


FIG. 7.

simply a case in which the lines of force of a simple coil, such as is shown in Fig. 6, are slightly diverted from the path they would take, if there were no iron present.

At this point it may be well to add that the presence of the iron not only diverts the lines of force from the natural path, *but also increases* their number, for as the path through the iron *offers much less* resistance, the same amount of electric current *flowing in the wires* will develop a greater magnetic strength.

The type of magnet shown in Fig. 7 is used extensively in electric machines, especially in small motors. Another form of magnet which can be developed from this is that in which there are two coils, one on each side of the armature. To construct such a magnet from Fig. 7, all we would have to do would be to make two magnets, like that in the figure, and bring them together with the two *N* poles on one side and the *S* poles on the other.

If the coil of Fig. 6 is increased in length and then drawn

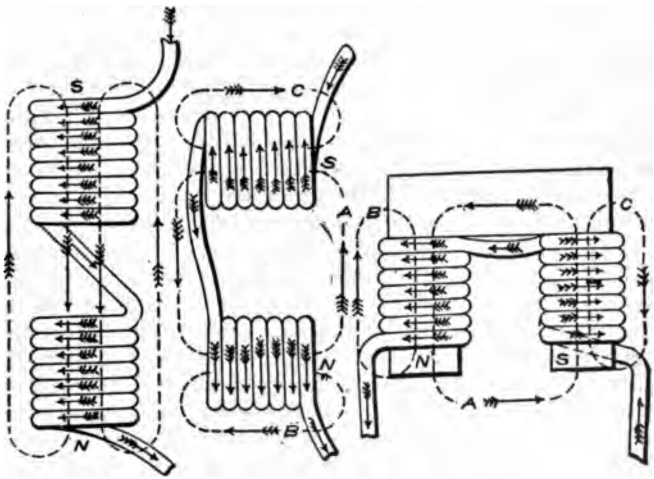


FIG. 8. FIG. 9. FIG. 10.

apart in the middle, we shall get a form such as is shown in Fig. 8, and the lines of force will pass through the two halves of the coil, as indicated by the broken lines. If we now bend the coil so that the two halves are parallel with each other, as shown in Fig. 9, then the lines of force on one side will still continue to flow through both parts of the coil, as indicated by the broken line *A*, but the other lines will necessarily break in the middle and form *two independent* paths, as shown at B and C. Their *direction through the* halves of the coil, however, will be the *same as before, and the* only reason why they break is that by

so doing they avoid traversing a considerable amount of unnecessary space.

The two coils of Fig. 9, which, as we have shown, are simply parts of one and the same coil, can readily be applied to a magnet of the form shown in Fig. 10, and thus we arrive at that class of magnets in which two coils are used and we find that they in no way differ in principle from the more simple variety in which only one coil is required. A comparison of the magnets in Figs. 7 and 10 will show that there is no difference between them except in the location of the coils. In both it will be noticed that the lines of force have one path from end to end of the magnet, as shown by line *A*, in both figures, and one path *B* in Fig. 7 and two paths *B* and *C* in Fig. 10, which are not from end to end of the magnet. In electric machines, the main path from one end to the other is the only part of the magnetism that is made useful; the lines passing along the other paths are of no service, and are generally called the stray field.

In Figs 6 and 9 the lines of force passing along the several paths are practically equal, but in Figs. 7 and 10 such is not the case. As has been stated, iron is a much better conductor of magnetism than air, therefore as the proportion of the line *B* in Fig. 7, that passes through air is greater than that of line *A*, the magnetism along the latter path will be the greater. In properly constructed electrical machines, the space between the ends of the magnet is nearly all filled up with the iron core of the armature, and this reduces the length of the air portion of the lines of force passing along the main path to such an extent, that the stray field, through the other paths, is usually but a small proportion of the total number of lines of force developed by the coils. The aim of the designers of electrical machines is to reduce the length of the air portion of the main path of the magnetism as much as possible, and to make that of all other paths as great as possible, so as to reduce the stray field to the lowest point.

Fig. 11 represents one of the several forms of field magnets used in electric machines and a comparison of it with Fig. 10 will show that the only difference is that the ends *N S* are longer and are so formed as to inclose a circular space within which an armature may revolve. In addition, the outline is rounded

off at various points so as to give the structure a more artistic and mechanical appearance. These differences between the two figures do not, however, in any way alter the relations between the electric current flowing in the wire coils *B B* and the magnetic lines of force in the magnet *M*.

When the pole ends *N* and *S* are short, as in Fig. 10, the lines of force in passing from one to the other have necessarily to follow a curved line, as was shown in Fig. 2, but with the con-

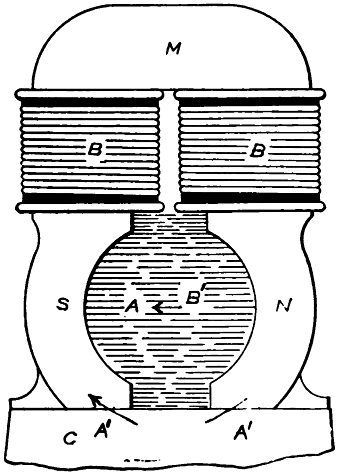


FIG. 11.

struction of Fig. 11 they can pass in straight or nearly straight lines from pole to pole, owing to the fact that the surfaces are long and practically parallel. When an iron armature is inserted in the space *A*, which leaves an opening of, say, only an inch or less between its surfaces and the pole faces, the lines of force pass from one to the other in the direction that reduces the distance to the lowest amount, and this, as can be seen at once, is in the direction of the radius of the circle.

In machines of the type shown in Fig. 11, it is necessary that the base *C* be made of brass or some metal other than iron or

steel, for, if either of the latter were used, the lines of force would not pass from pole to pole across the space *A*, but would follow the path indicated by the arrows *A'*, owing to the greatly reduced resistance along their route. If, however, *C* is made of brass it will not conduct the lines of force any better than the air in the space *A*, therefore the path of arrow *B'* will be followed.

In what has been said up to this point we have shown by easy stages the principles upon which the field magnets of electric machines act. A careful survey of the subject will show that the apparently complicated structure of Fig. 11 is nothing more than an elaboration of the simple diagram Fig. 4, the single wire of this figure being replaced by the coils *B B* of Fig. 11, and the opening in the rings between the ends *N S* being replaced by the armature space *A*. Both these figures are representations of devices to utilize the property of electric currents, explained at the start—that is, that these are surrounded by magnetic force. Fig. 4 is a crude arrangement intended only to demonstrate the truth of the statements, and also to show in what manner the presence of iron affects the position of the magnetism with reference to the current, while Fig. 11 shows one of the numerous forms in which this principle is utilized in a practical way.

With the explanations already given, it ought to be an easy matter to trace out the relation between the current flowing in the magnet coils and the magnetic lines of force in any form of field magnet; at the proper time, however, we will consider more in detail the various types of fields actually used. For the present, having shown how the magnetic force is concentrated at the space *A*, the next most important question is to show how this is used to generate electric current. To this subject we give our attention in what follows.

# CHAPTER III.

## COMMUTATION.

IN connection with Fig. 2, it was shown that, if a closed conducting loop is moved across the lines of force of a magnetic stream, an electric current will be induced in it, and further that the direction of the current will depend upon the direction in which the loop moves. In Fig. 11, if a conductor is moved upward over the space *A*, a current will be induced in it that will flow up out of the paper, the conductor being held in a position perpendicular to the paper—that is, parallel with the axis of the circular faces of the poles *N* and *S*. If the movement is from the top downward, the direction of the current will be down through the paper. The space *A* in an electric machine is called the magnetic field, and we shall refer to it as such hereafter.

In any electric machine the wire wound upon the machine itself, or at least that part that is wound upon the armature, together with the wire that conveys the current from the machine to the various apparatus in which it is used, must form a complete endless path; if it does not, there will be an open circuit, as it is called, and no current will flow. The part of this endless path or loop that is wound upon the armature is the part in which the current is induced, and the balance the part in which it is utilized. The latter part remains stationary, but the former must move so as to cut through the lines of force of the magnetic field, otherwise there would be no current.

It may not appear clear at first how a stationary part, outside of the machine, can be permanently connected with a moving part within the machine, but Fig. 12 will make this arrangement quite plain. This figure represents in the simplest possible form the armature of an electric machine. Imagine it to be mounted in Fig. 11, then the shaft *S* would be in the center of the circular space *A*. The coil *C* would have to be separated from the shaft by a bushing, *H*, made of some material that will not conduct electricity. Such materials are called insulators, hence it is said that the coil must be insulated from the shaft.

and for that matter from every other metallic part of the machine.

As will be seen, the ends of coil *C* are attached to rings *A B*. These are shown standing out in the air, but it will be understood that they are mounted upon the shaft, and from what we have said about insulation, it will be further understood that there must be no metallic connection between them and the shaft. The springs *D E*, which are commonly called brushes, serve to make a metallic connection between the ends of the coil *C* and the ends *F G* of the external part of the endless loop. Thus, by means of the brushes *D E* a permanent connection is

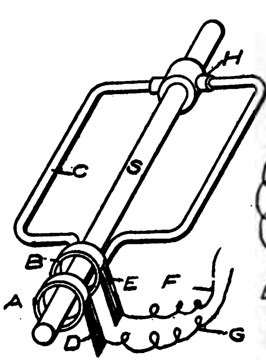


FIG. 12.

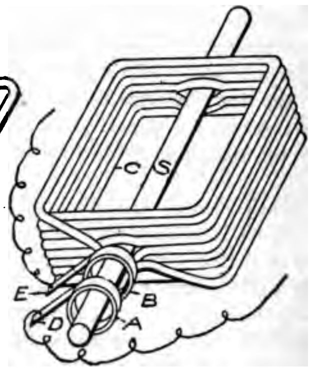


FIG. 13.

maintained between the moving and the stationary parts. From this it will be seen that all that is necessary is to keep up a metallic contact, and that a rigid connection is not required.

Now, as to the current induced in coil *C* when it is mounted in the space *A*. Suppose that the rotation is in the direction in which the hands of a clock move, then the side of the coil that moves from the top position, around the right-hand side to the bottom will have induced in it a current flowing down into the paper, and the other side of the loop, as it will cut the lines of the field *in the opposite direction*, will have induced in it an oppositely *directed current.* These currents, passing through the brushes *A B to the outer* part of the circuit, will necessarily constitute

a single current, for, as can be seen at once, the same current, if it flows down one side of the coil, will flow up the other side.

Speaking with entire accuracy, it is not correct to say that by the movement of the coil across the lines of force a current is induced in it; what actually takes place is that an electrical pressure is developed in the wire, and this pressure, which is called electromotive force, causes a current to flow, but the strength of this current is dependent not only upon the amount of pressure, but also upon the amount of resistance that opposes the flow of current. The electric pressure is measured in units called volts, so that when a current at so many volts is spoken of, it means that it has that pressure, but this gives no idea of its strength or quantity. The quantity is measured in amperes; therefore, whether a current is weak or strong can be judged by the number of amperes. The resistance the current encounters in its flow through the circuit is measured in units called ohms. The electrical pressure, or electromotive force is abbreviated into the letters e. m. f., and this abbreviation is used in speaking of electric currents, as well as in writing. From this point onward, then, the letters e. m. f. when used mean electric pressure.

The e. m. f. induced in the coil rotating in the field *A* can be increased in several ways; first, by increasing the strength of the magnetic field; second, by increasing the velocity with which the coil rotates, and third, by increasing the number of turns in the coil. If a coil with a single turn, as shown in Fig. 12, has an e. m. f. of 1 volt induced in it when rotating at a velocity of 10 revolutions per second in the field of Fig. 11, then a coil having eight turns, as shown in Fig. 13, will have induced in it an e. m. f. of 8 volts if rotated at the same velocity in the same field. If an e. m. f. of 1 volt is induced in any coil when rotating at a velocity of 10 revolutions a second, at 20 revolutions a second the voltage will be 2, and at 50 revolutions will be 5. If the strength of the magnetic field is doubled, the e. m. f. will be doubled, providing the velocity and the number of turns in the coil remain the same. If the field strength is increased five times, the voltage will be increased five times. Thus we see that the e. m. f. can be increased either *by increasing the number* of turns in the coil, by increasing the *number of revolutions* or by increasing the strength of the field.

and that in each case the increase in voltage is in direct proportion to the other increase—that is, to the increase in the turns, the revolutions or the field strength.

If we follow the direction of the current induced in the coil, Fig. 12, during one complete revolution, we shall find that it is not always in the same direction, but that at each half revolution it reverses. Consider one of the sides to be at the top of the field space *A* in Fig. 11, then, if the rotation is clockwise, the current in this side, as it sweeps past the face of the *N* pole, will be into the paper, and will so continue until the side has reached the bottom position. From this point onward this side moves upward, past the face of the *S* pole, and the direction of

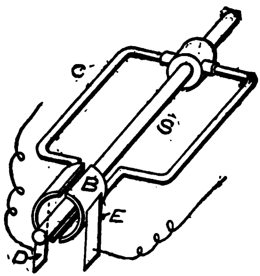


FIG. 14.

the current will be up from the paper. Such currents are called alternating currents, and are used extensively for large power transmission plants, but for the operation of railways, incandescent lights, arc lights, and the majority of stationary motors, continuous currents are commonly used—that is, currents that flow always in the same direction.

A machine that will generate continuous currents of a sufficiently high voltage for practical requirements cannot be made, therefore the only thing that can be done is to provide means for converting the alternating current into continuous before it passes to the external circuit. This is accomplished by means of a device called a commutator, whose action can be understood from Fig. 14, which shows such an apparatus in its sim-

plest form. Comparing Figs. 12 and 14, it is seen that the difference between them is that in the first the ends of the coil *C* are attached to rings, while in the latter they are attached to halves of one and the same ring.

Studying out the effect of this difference we find that in Fig. 12 each of the brushes *D* and *E* is always in contact with the same end of the coil, while in Fig. 14 each brush connects alternately with opposite ends of the coil, for when the coil rotates, *E* passes by turns onto the surfaces of the halves *A* and *B* of the single ring. It will be further noticed that these changes take place at each half revolution, therefore they are in time with the reversals of the current, and all we have to do to cause the current flowing out of brush *E*, to be always in the same direction, is to set the ring *A B* so that the brushes will pass from one half to the other at the very time when the current in the coil reverses.

If we made an armature with but one coil, the current obtained from it after being rectified by the commutator would not be uniform, but decidedly pulsating, for, if the current in the armature coil reverse its direction at each half revolution, it must at the instant of reversing drop down to no current at all. As a matter of fact, the strength of the current rises gradually from zero to a maximum value, then decreases to zero again, and begins to grow, flowing in the opposite direction. Thus the current rises and falls in the armature coil, and when it is sent out to the external circuit in a rectified form it is pulsating.

If instead of one coil we use several, as indicated in Fig. 15, which is an end view of an armature, then the pulsations of the current will be much less, because, as there are a greater number of coils, the ends of each one must be connected with segments that occupy less than one-half the circle; therefore, when the brushes pass upon a pair of opposite segments, the e. m. f. being developed in the coil at that instant is far above zero. This is also the condition when the brushes leave the segment. In Fig. 15 four coils are shown; therefore, the segments to which the ends are attached cover only one-eighth of the circle. With this arrangement there will be eight pulsations of the current in each revolution, instead of two, as is the case when one coil is used, but at each one of these pulsations the

strength of the current will drop but slightly instead of falling to zero, as it would with the single coil.

The arrangement of the coil connections with the commutator segments, shown in Fig. 15, is what is called an open coil connection or winding, and is used only in some forms of "arc" lighting machines, for which purpose it appears to be specially adapted. For the great majority of machines what is called a closed coil winding as shown in Fig. 16 is used. The difference between open and closed coil windings is, that in the former the several coils are entirely independent of each other, while in the latter they are connected so as to form parts of one continuous coil, which comprises all the wire wound upon the armature.

In order to have this type of winding it is necessary that the ends of separate coils be connected with each other; therefore two ends are attached to each commutator segment, and as each coil cannot have more or less than two ends, it follows that

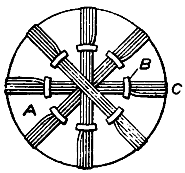


FIG. 15.

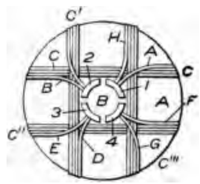


FIG. 16.

the number of commutator segments will be equal to one-half the number of ends, or, in other words, equal to the number of coils. In the open coil winding, the commutator segments are equal in number to the number of ends, or twice the number of coils.

This can be plainly seen from an examination of Figs. 15 and 16. In Fig. 16, if we suppose a brush to be resting on segment 1, the other brush will be upon segment 3, and the current entering through one brush will split, passing through the wire of the coils in two paths and coming out at the opposite brush. By following the current entering through segment 1 we shall see that the branch passing into wire H will traverse coil C''' and go to segment 4 by wire G, where it passes over to wire F,

and thence through coil $C''$ and by wire $E$ to segment 3, which is opposite to the one through which it entered. The other part of the current will leave segment 1 by wire $A$ and will pass through coil $C$, coming out by wire $B$ to segment 2, thence by wire $C$ entering coil $C'$ and coming out of this by wire $D$, passes to segment 3, where it joins the other half of the current. From this we see that in order to make the circuit continuous, that is, with all the armature coils connected together, it is necessary to connect them so that the current divides and passes through the armature in two branches; this, however, is no objection, while the advantages of the closed coil winding are very decided, as will appear hereafter.

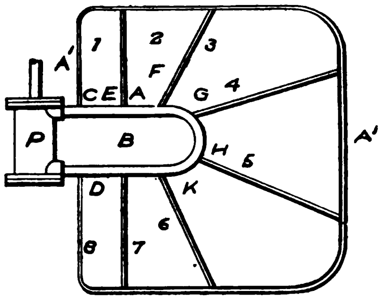


FIG. 17.

We have shown that, if a number of coils are placed upon the armature instead of one, the current is rendered more uniform. This, however, is only one of the advantages. Another, which is of equal importance, is that it reduces the size of the sparks that appear at the commutator when the brushes pass from one segment to another. Why the number of coils should have an effect upon this sparking at the commutator can be made clear by a comparison with a system of water pipes, such as is shown in Fig. 17. Let $P$ represent a pump, and $A$ a large pipe, through which water is kept circulating by the pump. Let $A'$ $A'$ represent another pipe much smaller than $A$. Now, if the water is flowing in pipe $A$, and this is suddenly shut off at $C$ and $D$, so as to force the water into $A'$, there will be a severe shock upon the pump, because the resistance that the small pipe

will offer to the passage of the water will be very much greater. If, instead of stopping off the whole of pipe *A* and cutting in all of *A′ A′*, we stop off from *C* to *E* and only introduce the parts 1 and 2 of the small pipe, the shock will be greatly reduced. If we follow this up by cutting out section *E F* of the large pipe and then *F G, G H,* etc., and cutting in the corresponding sections of the small pipe, the complete change from large pipe to small one can be effected without giving such a severe shock.

Now, suppose that at *B* we have a valve arranged so as to reverse the connections between the pump and the pipes, and that this is so set that it can reverse the connections rapidly. The

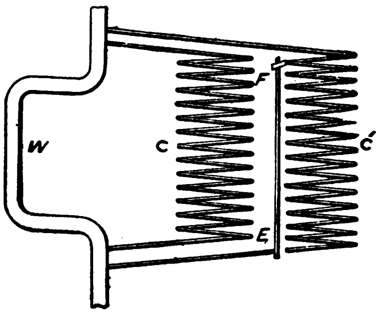


FIG. 18.

first thing we shall realize in considering it will be that at each reversal there will be a considerable shock impressed upon the pump and pipes, and the next thing we shall note will be that with the small pipe the shock will be greater because the pressure will be greater. In an electric arrangement, the counterpart of Fig. 17, would be such a disposition of circuits as is shown in Fig. 18. Let *W* represent a large wire, through which a current is passing, and *C* a long coil of small wire. Now, if the wire *W* is suddenly cut in two, the current will be strongly resisted in its effort to pass through *C*, and as a result there will *be a shock, which* will cause the current to make an effort to *keep up the flow* between the ends of *W*. If for C we substitute *C′ and set the slider F* upon the rod E so as to cut in more

or less of the coil, we find that, the greater the length of coil that is cut in, the greater the spark between the ends of *W* when they are separated. In the case of water, when you try to change its course suddenly, it results in giving a shock, which is in the nature of a hammer blow, but with electricity, when the course of a current is suddenly changed, it results in producing a spark as the current persists in following the old path. It is for this reason that, if an armature is wound with a few coils, the sparking at the commutator will be much greater than if numerous coils are used.

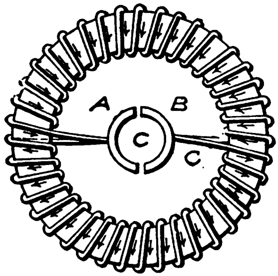


FIG. 19.

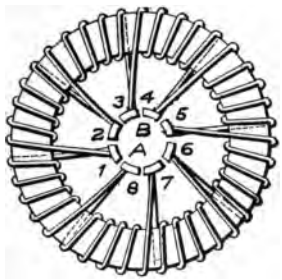


FIG. 20.

Fig. 19 shows a ring armature with only two coils, and Fig. 20 is a similar armature with eight coils. In the first, each time the brushes pass from segment *A* to segment *B*, the current reverses in one-half of the wire on the armature, but in Fig. 20, when the brush passes from one segment to another, the current reverses through only one-eighth of the wire upon the armature, hence the shock is less, and the spark, therefore, is greatly reduced.

# CHAPTER IV.

## TYPES OF DYNAMOS.

IN what has been said up to this point, we have outlined, in a general way, the principles involved in the operation of electric machines, and have shown how these principles are applied. We have not gone into details to any extent, as our aim has been to present a complete exposition of the most important points first. In the description of the manner in which the current is generated in the armature, we have gradually worked up to an exposition of the method of winding ring armatures.

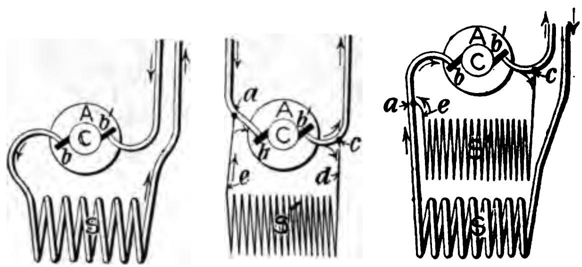


FIG. 21.

There are several other methods of winding ring armatures. There are several other forms of winding that are equally interesting, and, in fact, there are several modifications of the ring winding, all of which should be understood by those who wish to make such repairs as can be made without the assistance of a repair shop. We believe, however, that it is best to consider the different types of field winding before going any further into the subject of armatures.

There are three forms of field winding used commercially; *these are the series,* the shunt and the compound windings, which *are represented,* diagramatically, in Fig. 21. In the three dia*grams of this figure, A* represents the armature, C the commu-

tator and $S$ $S'$ the field coils. In the series winding, all the current generated in the armature passes through the field coils. In the shunt winding, only a small portion of the armature current passes through the field coils. In the compound winding there are two independent coils, through one of which all the armature current passes, and through the other only a small portion thereof. The compound winding is, in fact, as its name implies, a combination of the series and the shunt windings.

It might be thought that these different windings are used simply as a matter of fancy, but such is not the case; each one is adapted to a certain class of work, and is used for this and no other. A machine that is intended to supply current for arc lights must be so constructed that it will always deliver the same strength of current—that is, the same number of amperes. A machine intended for incandescent lighting must always deliver the same e. m. f.—that is, the same number of volts. For railway work the voltage of the current must increase somewhat, as the strength increases. For arc lighting the series machine is used, for incandescent lighting the shunt or the compound, the former, when the lights are near to the machine and the latter when at some distance. For railway purposes the compound machine is always used.

In the series winding diagram the brush $b$ connects with one end of the field coil $S$, and the other end of this coil passes out to the external circuit. In the explanation of the action of the armature, we showed that, if the strength of the field is increased, the voltage will be increased, and this greater voltage can be used either to force the same number of amperes of current against a greater resistance or a greater number of amperes against the same resistance.

For open arc lighting, the current generally used is of about 10 amperes strength, and it is necessary that it should remain at this strength to keep the lights burning steadily. If it increases, the lights will be too bright, and if it decreases they will be too dim, or will flicker badly. Arc lights are strung in the circuit in series—that is, one after the other—so that the same current passes through all the lights in the circuit in rotation. As the lights are connected in series, and as each light represents just so much resistance, usually about 4½ ohms, adding lights in

creases the total resistance against which the current must be driven, and cutting them out reduces the total resistance.

As we have shown, the armature, if running at a given velocity, which it always does in practice, cannot increase the voltage unless the number of turns of wire or the field strength be increased. The number of turns of armature wire cannot be increased, but by arrangements to be explained later, more or less of the wire can be rendered inactive, and this, for all practical purposes, is the same as actually changing the number of turns. In fact, it really is the same thing, for if an armature has, say, 500 turns of wire upon it, and we so connect them that only 100 are effective, the result is the same as if the other 400 turns were removed.

There are several ways in which the armature wires are cut in or out of service so as to increase or decrease the voltage of the current as the number of lamps changes. These devices have to be made so as to operate automatically, so that as fast as lights are turned on or off they will change the voltage to suit.

Voltage can also be varied by varying the strength of the field magnetism, but to do this the current passing around the magnet must be changed. As it is necessary that the current for arc lighting should remain always of the same strength, it follows that no variation of the voltage by variation in the strength of the current can be effected. We have shown, however, that passing the same current twice around a magnet is the same in effect as doubling the current through the wire, or, to put it more plainly, if we pass 10 amperes of current through a coil containing ten turns of wire, it will have the same effect as a current of 20 amperes passing through a coil containing five turns. By utilizing this principle, the series machine can be made to maintain a constant current by simply winding the field coils with as many turns as may be necessary to develop the highest voltage, and then providing an automatic device that will cut turns in or out as fast as is necessary to change the voltage.

There is yet another way in which the field strength can be varied without changing the strength of the current in the wire, and that is to provide two paths side by side, or in parallel, as *it is called, through* which the current may flow. One of these

paths will be through the coils wound upon the field, the other will be through a resistance that can be varied at will or by the action of an automatic device. If the resistance in this outside circuit is reduced, the current passing through it will be increased, and as the total current cannot change, the portion left to flow through the field coils will be less, hence, the strength of the magnetic field will be reduced, and the voltage of the current will drop. If the resistance in the outside path is increased, less current will pass through it, and then the field current will be increased, and the magnetic field being increased thereby the voltage will rise.

This last method, and that of rendering some of the armature wire inactive, are the ones most extensively used in connection with arc lighting machines.

The shunt winding is used, as already stated, when it is desired that the voltage of the current remain unchanged. The reason why such a result can be obtained with this winding can be understood by considering the middle diagram of Fig. 21. As will be seen, the current generated in the armature, *A*, divides at the point, *c*, after leaving brush, *b'*, and part goes out to the external circuit, while the balance passes through the field coil, *S'*, and thence to the *a* wire and to brush, *b*. If the armature keeps up a constant voltage, the current that will pass through the coil *S'*, will be of constant strength, for, as has been explained, the strength of the current flowing through any circuit in which the resistance does not vary is proportional to the voltage, and when this does not change the current does not change. If the current remains the same, the strength of the magnetic field in which the armature rotates will remain unchanged, and, therefore, the voltage of the current will be constant.

Current flowing in the external circuit, however, can vary within wide limits, because, if the voltage remains constant, the current will rise and fall inversely as the external circuit resistance is varied. A generator that delivers a current of uniform voltage is called a constant potential generator, and apparatus used in connection with such currents is so made that it is coupled in the circuit in separate branches, or in parallel, as it is *termed*. *Series arc lights*, as we have stated, are strung all in the

same path, so that the current that passes through one passes through the whole lot, but with incandescent lights each lamp is supplied with an independent current, so that, if there is one light in use, the current generated is just one-tenth of what it would be with ten lights burning. With one hundred lights in use, the current would be one hundred times as strong as with one light.

If there are two lights in use, the current has two paths through which to pass, and, therefore, can go through with double the freedom; that is, it has to encounter only one-half the resistance, and in the same way, if there are one hundred lights, the current can pass through them with one hundred times as much ease. This, when expressed in more exact language, means that as the number of lights in use is increased, the resistance opposing the flow of current is reduced, therefore the increase in current required is obtained without increasing the voltage.

If every lamp could be connected directly with the brushes, *b b′*, by wires of the same length, and these wires were very thick, so that they would offer little resistance to the passage of current, then, with the same voltage developed by the generator, the increase in current would be directly in proportion to the increase in the number of lamps. The lamps, however, cannot be connected in this way, as it would require a great amount of wire. The common method is to run feeders of large size wire to the points where the lights are to be used, and then branch off to the lamps from these. By this arrangement, a considerable amount of resistance is introduced into the circuit in addition to that of the lamps proper, and as this resistance will absorb a portion of the voltage, it follows that although the e. m. f. of the dynamo may remain constant, the actual pressure of the current, when it reaches the lamps, will be higher when the number of lights in use is small than when it is large.

From this it can be seen that, if this drop in voltage at the lamps is any considerable amount in comparison with the number of lamps used, a machine cannot be made to feed satisfactorily both a small and a very large number of lamps. In actual practice generators of the shunt-wound type are made so that, if the lamps are not more than 200 or 250 feet away, the volt-

age will not drop more than 2 or 3 per cent, when the number of lights in use is varied from five to one hundred. This change in voltage results in producing only a small change in the brightness of the lights, too small to be noticed by the untrained eye; therefore, for distribution at short distance, as, for instance, in lighting a single building, simple shunt-wound generators are entirely satisfactory; but for distribution to greater distances, as, for example, from an electric lighting station, machines must be provided that will give a slightly increasing voltage as the

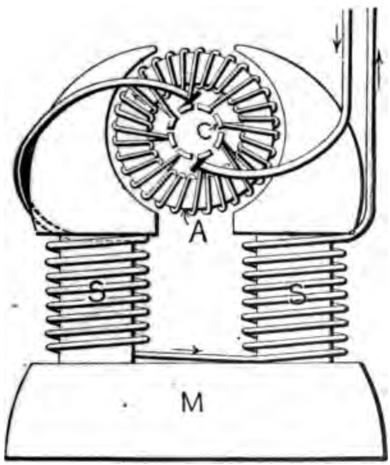


FIG. 22.

current demand increases, so as to compensate for the drop of pressure in transmitting the current over the lines.

For this purpose the compound winding is used. A shunt-wound generator will not deliver a perfectly constant voltage, even at the brushes, *b b′*, owing to the fact that the armature itself *has some resistance,* and this absorbs a portion of the voltage, *but in well-designed* machines this internal loss, as it is *called, does not* amount to over 2 per cent, that is, if the ma-

chine is running light, the voltage at the brushes will be not over 2 per cent higher than if it is running with full load.

A compound-wound generator can be made to just compensate for the drop of pressure due to internal resistance of the armature, or it can be made to increase the e. m. f. as the current strength increases. If made to just compensate for the drop, it is called even compounded, but if it raises the voltage, it is called over-compounded. From the diagram to the right in

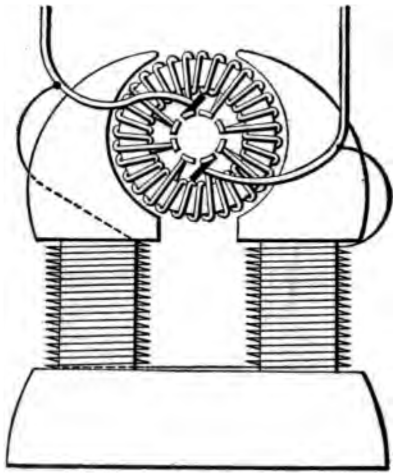

FIG. 23.

Fig. 21, the principle upon which the action of compound winding depends can be understood at once, as it is very simple.

As will be seen, there are two coils upon the field, one being a shunt coil. This coil will act just as in any shunt machine, and will cause the armature to generate a current of nearly uniform voltage. The other coil is series wound, and its effect upon the armature will necessarily increase as the armature current increases, for all the current passes through it, hence, the magnetizing effect of this coil will grow with the current, and thus cause the armature to increase the voltage, as the numbe

of lamps is increased. If the series coil has but a few turns of wire, its help will be small, and it may be able to compensate only for the reduction of voltage due to armature resistance, but if the number of turns of the series coil is sufficient, the increase in voltage will be more than enough to cover this loss. Over-compounded generators are necessary for electric lighting stations, so that the increased voltage may be used to offset the

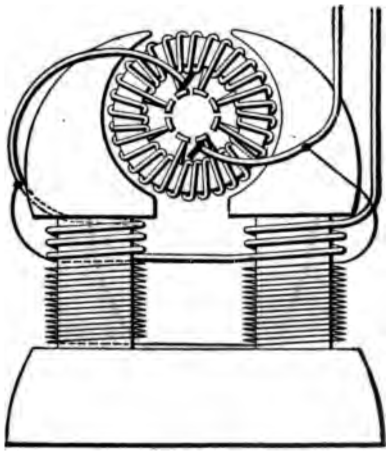

FIG. 24.

increased drop in transmitting heavy currents to the points of distribution.

Fig. 21 shows the principle of the field and armature wire connections for the different windings, but the actual connections made upon the machines themselves can be better understood from Figs. 22, 23 and 24, the first being a series winding, the second a shunt winding and the third a compound winding for bipolar dynamos.

## CHAPTER V.

### THE WINDING OF ARMATURES.

IN the preceding chapters we have given a general outline of the principles upon which electrical machinery operates. With this knowledge as a basis to start upon we can proceed further, and by investigating the details of construction of the various parts of generators and motors, become familiar with the more intricate actions involved in the operation of such apparatus.

In studying the action of the steam engine, if we get so far as to understanding how the steam enters the cylinder, and how it gets out, we shall be able to form a fair idea of the manner in which rotation is imparted to the engine shaft; but to understand the machine fully, we shall then have to follow up by investigating the action of the governor, and the manner in which this acts upon the throttle valve in simple engines, or the cutoff valves in the more elaborate engines. It is necessary to follow this same course in studying the action of electrical machinery.

In investigating the actions of all the various parts of a generator, the first subject we shall take up is the winding of the armature. There are several ways in which armatures can be wound, and to be able to master them all it is necessary to become familiar with the manner in which the action of the magnetic field in which the armature rotates acts upon the armature wires to develop the e.m.f., which causes the electric current to flow. The subject has been explained to some extent in the preceding articles, but it will now be considered fully.

As we have explained, the e.m.f. is induced in the armature wires by the cutting of these through the lines of force of the magnetic field as the armature rotates, but the direction of the e.m.f. is not the same all the time; on the contrary, it is in one direction when the wire is passing in front of one of the poles, and in the opposite direction when it is passing before the other pole. The action can be made clear by the aid of Fig. 25, which represents an armature

and the poles between which it rotates, the balance of the field being omitted. In this figure, *A* represents the armature, *P* and *N* the poles, *C* the commutator from which the current is taken and *d e* the brushes. The arrow *f* indicates the direction of rotation of the armature.

As we have already shown, the lines of force will pass through the armature from one pole to the other, and for the purpose of this explanation we will assume that they pass from the pole, *P*, to pole, *N*, in a direction parallel to the line, *P N*. If a wire moves in the same direction as the lines of force, that is, in the direction of line, *P N*, no e.m.f. will be induced in it,

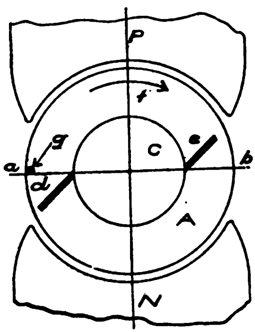


FIG. 25.

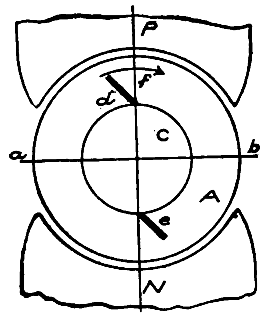


FIG. 26.

because there will be no cutting of lines of force, which is the condition necessary for the generation of an e.m.f.

Now, the wire on the armature, which at any moment is located upon the line, *a b*, will be moving parallel with line, *P N*, or at least practically so, and, this being the case, no e.m.f. will be induced in it. From this it follows that the wire, *g*, will have no e.m.f. induced in it when in the position shown, but, as soon as it passes beyond this position, it will begin to be acted upon.

Through a very short arc starting from the line, *a b*, the wire, *g*, will move practically parallel with line, *P N*, but from *that point on its direction* of motion will converge more and *more toward the direction* of line, *a b*. When g reaches the

line, *P N*, it will be moving directly parallel with line, *a b*, and its velocity across the lines of force will be the greatest. Now the magnitude of the e.m.f. induced in a wire that cuts through a stream of magnetic lines of force is proportional to the velocity with which the wire moves, providing the magnetic stream is of uniform density. This being the case, it follows that when wire, *g*, is passing the line, *P N*, the e.m.f. induced in it will be the greatest, and also that when it is passing the line, *a b*, the e.m.f. induced in it will be nothing, or zero.

If the wire moves across the lines of force in the direction of the arrow, *f*, the direction of the e.m.f. will be opposite to what it would be if the motion were reversed. Thus, if when the wire is moving in the direction of arrow, *f*, the induced e.m.f. causes a current to flow toward the pulley end of the armature shaft; then, if the direction of motion of the wire is opposite to that of the arrow, *f*, the direction of the current that would flow through the wire would be away from the pulley end. The direction of the induced e.m.f. and the current caused to flow thereby depends upon the direction in which the wire cuts across the lines of force, and not upon the part of the magnetic field in which the wire moves, that is to say, it makes no difference whether the wire moves in the direction of the arrow, *f*, above line, *a b*, or below that line. It may move close up to the surface of pole, *P*, or close to the surface of pole, *N*, or along the line, *a b;* in any case the direction of the e.m.f. will be the same.

From this it can be seen that if, while the wire, *g*, is rotating through the upper half of the circle, the e.m.f. induced in it causes a current to flow toward the pulley end, that in rotating through the lower half of the circle, the e.m.f. induced will cause the current to flow away from the pulley end. We have also seen that the e.m.f. is zero when the wire is passing the line, *a b*, and that it is the greatest, that is, the maximum, when passing line, *P N;* therefore, in each revolution, the current will reduce to zero twice, and it will reach its maximum strength twice, but these two maximum values of the current will occur when the directions of flow are opposite. From this it follows *that the current induced in the armature is not continuous, but, on the contrary, is alternating, starting from zero each time the wire passes the line, a b.*

Now, what is true of the wire, *g*, is true of every wire wound upon the armature; hence, all the currents induced in all the wires will be alternating; but, if we can wind the wire upon the armature and connect it in the proper manner with a device that will reverse the connections as the wires pass the line, *a b*, then we can draw a continuous current from this device by placing collecting brushes upon the line, *a b*, as indicated by *d* and *e*.

If we were to place these brushes upon the line, *P N*, as shown in Fig. 26; then we should obtain no current whatever. Why this is so can be understood from the following: Suppose the wire to be wound upon the armature in such a manner that, if the current enters through brush, *d*, Fig. 25, it will divide, part passing through the wire wound upon the upper half of the armature, and part through the wire wound upon the lower half, the two currents coming together at brush *e*; then each one of these currents will be forced along by the full value of the e.m.f. induced in all the wire through which it passes.

Now, suppose the brushes are set upon the line *P N*, then each half current will pass through one-half of the wire wound upon the upper half of the armature, and through one-half of the wire wound upon the lower half of the armature, and as the direction of the current in the upper and lower parts of the armature is opposite, it follows that each half current would be forced ahead by an e.m.f. equal to that which would force it back, that is, the back pressure would be equal to the forward pressure, and as a result there would be no current to pass in or out through the brushes, *d e*.

How the wire is wound upon the armature and connected with the commutator can be best explained by means of Figs. 27 and 28, which represent the ring winding, which is the simplest of all. Fig. 27 represents a portion of a ring armature, so as to show it upon a sufficiently large scale to indicate clearly the course of the current through the wire.

The wire is wound in sections, generally called coils, and these are marked in the drawing, 1, 2, 3, etc. Each coil consists of a length of wire wound around the armature core, in the same manner as a thread is wound around a spool. The entering end of each coil is marked *a* and the leaving end b, and these ends are so grouped that the entering end of one coil is placed along-

side the leaving end of the coil just back of it; thus the entering end of coil *2* and the leaving end of coil *1* are placed side by side. The wire, as we have explained, is covered with cotton or silk, which materials are nonconductors of electricity, and, therefore, prevent the current from passing from one wire to another adjoining it.

If the end *a* of coil *2* is connected with end *b* of coil *1* by soldering, or any other connection that will afford a metallic contact, then a current passed into coil *1* through end *a* would run through to the end *b* of coil *2*. If the *a* (entering) ends of all the coils wound upon the armature are connected with the *b* (leaving) ends of the adjoining coils, then the current entering through *a* of coil *1* will pass through all the coils and come out

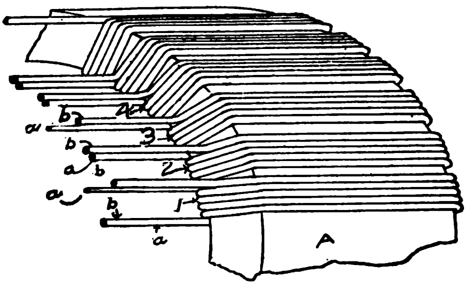


FIG. 27.

of the *b* end of the last one, and the winding will be the same as if it were all one continuous wire.

If the *b* end of the last coil is connected with the *a* end of the first coil, the coils will be closed upon themselves, and form an endless wire. If then a current of electricity is passed through one of these end connections. it will not confine itself exclusively to one path, but will take two, as from this junction it can flow in either direction equally well.

Thus, if the current is run in at the junction of the ends of coils *3* and *4* it will pass by end *a* through coil *4* and those ahead of it, and by end *b* to coil *3* and those back of *3*, and these two currents will come together at any other junction where another wire may be connected to take off the current.

*Fig 28* shows a completely wound armature of the ring type,

with its commutator, and from this the manner in which the connections between the brushes and the ends of the armature wire are reversed can be made clear. The outer circle represents the armature, while the inner ring is the commutator. The circle, *C*, represents insulating material which separates the commutator segments, *S*, from the metallic hub, *H*, upon which they are held. The heavy lines represent insulation placed between the segments, *S*, so as to separate them from each other.

Upon the armature ring the coils are wound in precisely the

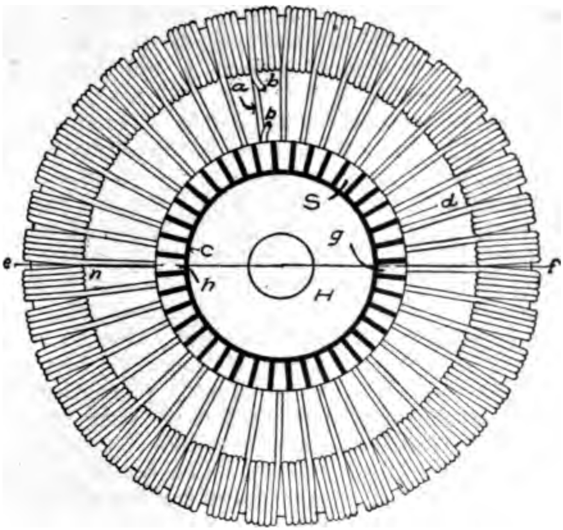


FIG. 28.

same manner as in Fig. 27, and their ends are connected with each other in the same way. These ends are also connected with the commutator segments, an *a* end and a *b* end being connected with each one of the segments, *S*. In the drawing, the appearance is that only one end connects with each commutator segment, but this is due to the fact that the two wires are in line. One of the *connections* at the upper part of the figure has

the *b* wire, which is the front one, shown broken and bent to one side so as to show the *a* wire behind it.

To properly understand the action of the armature and commutator in Fig. 28, assume them to be located between the poles of Fig. 25, then the line, *e f*, will correspond to line, *a b*, and brushes located in the position of *d* and *e* would be pressing upon the commutator segments *g* and *h*. Now, suppose the current passes out through segment *g* and that it enters through segment *h*. This latter segment is connected with the *b* end of the coil directly above the line, *e f*, and with the *a* end of the coil under the line, hence the current will pass into the upper and lower halves of the armature wire, and after traversing all the coils on each half will come out at segment, *g*, with which the other brush will be in contact.

Suppose the armature to be rotating in the direction of the arrow in Fig. 25, then when it moves far enough for the brush, *d*, to rest upon the segment next below h, the current will enter the coil, *n*, through the *b* end instead of the *a* end, as it did when the brush rested upon segment, *h*, that is, by the passage of the brush from segment, *h*, to the one below it, the current in coil, *n*, has been reversed. We also find that this coil, *n*, has passed from the under side of line, *e f*, to the upper side; hence the e.m.f. induced in it will also be reversed. Thus we see that so far as this one coil is concerned, the connection between it and the brush through which the current enters from the circuit outside of the armature has been reversed at the same time that the direction of the e.m.f. induced in it has been reversed.

If we examine what takes place with respect to the coil on the right side of the armature, we shall find that in it the reversal of the current takes place at the same time, and that it also agrees in time with the reversal of the direction of the e.m.f. Now, what is true of these two coils is true of all the others, and in each pair the direction of the current will be reversed as they pass under the brushes; that is, as they pass from one side of the line, *e f*, to the other side.

Usually the number of coils into which the armature wire is divided is large, in order to prevent the sparking from becoming serious, and on this account the higher the voltage of the machine the greater the number of segments in the commutator and

the greater the number of coils into which the armature wire is divided. It is not difficult to see why the number of coils reduces the size of the spark.

As all the current that enters the commutator through one brush passes out through the other, the strength of the current flowing in all the coils is the same, notwithstanding that in the coils that are connected directly with the segments upon which the brushes bear, the e.m.f. may be zero, or very nearly so. This being the case, we can see that while the brush passes from one segment to the other, the current is flowing from its end with the full strength, and that it will decrease only as fast as it increases flowing out of the adjoining segment. The end of the brush is always made wider than the insulation that separates the segments, therefore it comes in contact with one segment before it leaves the other, and, while it is in contact with the two segments, currents flow from both.

Current passing to the old segment cannot die out as fast as the brush passes away from it, and neither can the current in the new segment build up that fast, for the flow of the current through the coil between these two segments has to be checked and reversed, and this checking and reversing of a current of electricity cannot be done instantly any more than it can with a current of water. If the coil is short, that is, has but few turns, the force with which the current tends to keep moving ahead is small, but if the coil has many turns, the force is correspondingly increased; now, by increasing the number of coils upon the armature, the number of turns in each one is reduced, therefore the greater the number of coils, the less tendency to spark.

## CHAPTER VI.

### THE WINDING OF ARMATURES *(Continued).*

WINDING a ring armature is so simple that it is readily understood, but the windings of drum armatures generally prove puzzling to most beginners. In reality the drum winding is simply an extension of the ring winding, and that this is the case we will undertake to explain clearly by the aid of Fig. 29, which represents a drum armature core with one coil wound upon it. If this armature were of the ring type, the

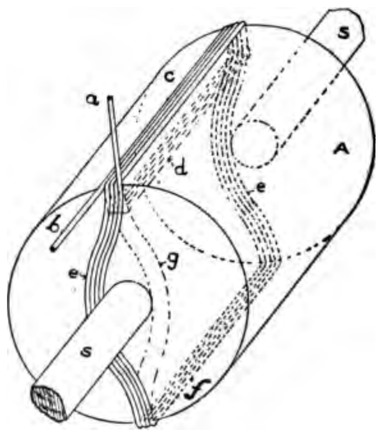


FIG. 29.

coil, *c*, would return through the inside of the ring, taking the path indicated by the dotted lines, *d*, but as there is no opening at this point for the wire, it becomes necessary to find some other *place for the return* side of the coil. The only place is on the *opposite side of the* core, along the path indicated by the dotted *lines, f;* *therefore,* we pass the wire over from one side of the *diameter to the other,* as shown by the lines, *e*.

In the ring winding, the ends of the coils are connected with the adjoining coils, and this is also done in the drum winding, but the point that causes confusion is that it is not easy to determine which is the adjoining coil. By examining Fig. 29, we shall see that, as the coil occupies two positions upon the armature surface, one along *c* and one along *f*, and as there are ends at one side only, one-half of the spaces occupied by the coils must be blind, so far as coil ends are concerned; hence the adjoining coils are, in reality, those that fill the alternate spaces.

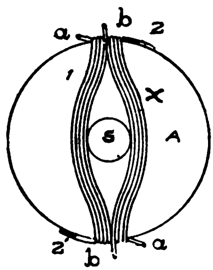


FIG. 30.

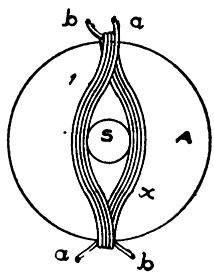


FIG. 31.

This can be made clearer by means of Figs. 30 and 31, in both of which two coils are shown; in one they are wound side by side, and in the other they are wound one on top of the other. In Fig. 30, which shows the coils side by side, it will be seen that the ends of one coil come out at the top of the figure, and the ends of the other at the bottom, that is, the ends are one-half of the circumference apart. The two coils are side by side, but they are not the adjoining coils; they do not correspond to coils *1* and *2* of Fig. 27. Coil *2* of Fig. 30 would fill a space to the right of that occupied by coil *x*, as is indicated in the figure, and at the lower side of the armature the position of coil *2* would be as indicated at *2'*. The space between the lower side of coil *2* and the lower side of coil *1* would be filled by a coil that would be one number higher than coil *x*. The number of coil *x* would be half way between *1* and the highest; thus, if the armature had 24 coils, coil *x* would be coil *13*, and the coil between the lower end of *1* and *2'* would be coil *14*.

In Fig. 31, the coils are wound one on top of the other, but the same order is preserved as in Fig. 30, and coil *1* has its ends coming out at the upper side of the figure, coil *x* at the lower side. In connecting these coils, the same order, with respect to the ends, is observed as in the case of the ring armature; that is, the *a* end of one coil is connected with the *b* end of the adjoining coil.

All the coils that we have shown are made in one layer, and this is the actual construction when the wire is large and the number of turns small, but in many cases the wire is fine and there are a great many turns; then the coil is composed of many layers, sometimes as many as fifteen or twenty. In any case, however, the principle of winding is the same, and the order in which the ends are located is not varied.

In the winding of drum armatures, the coils are not always wound in the same order. In some cases they are put on in the order in which they are numbered; that is, *1* and *x* are wound first, then *2* and *x1*, then *3* and *x2*, and so on to the end. When the winding is done in this order, the end of the armature presents the appearance of a winding stairway looked at from above. In other cases, the *1* and *x* coils are wound, then two more coils located half way between these, that is, at right angles to them; and then other coils are wound on the eighths of the circle. When this order is observed, the appearance of the end of the finished aramture is that of a ball of cord in which the windings cross each other at right angles.

Whatever the style of winding may be, when it comes to the connection of the coil ends with each other and with the commutator, the regular rotation of the numbers is followed; if it were not, the current would not circulate through the wire in the proper direction and the machine would not operate.

When the coils are wound, as in Fig. 30, that is, so as to form but one layer, the connection of the coil ends is simple, but when the order of Fig. 31 is adopted, there are two layers of coils, and unless the order in which the ends should be connected is well understood, there is danger of making wrong connections. The general principles to be observed in making armature connections for a drum winding can be understood from Figs. 32 and *33, the first showing* the single-layer winding and the second the

double-layer. In both these diagrams the armature is shown in section at right angles to the shaft.

In Fig. 32 there are 16 coils and in Fig. 33 there are 32. In both figures the coils are arranged as in Fig. 30, that is, side by side. In the two-layer windings the coils can be placed side by side or one on top of the other. The latter winding is shown in Fig. 31. In Figs. 32 and 33, the dark parts indicate the side of the coil that has no ends, what we may call the return side. The return side of coil *1* is marked *1'* and that of coil *2* is marked *2'*, and so on. All these sides are not marked in the diagrams, as it would only create confusion, but with the few marked, the numbers of the balance can be easily found.

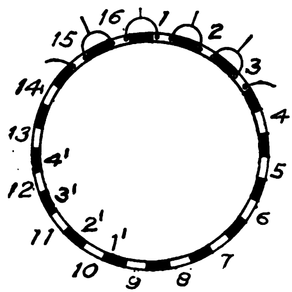

FIG. 32.

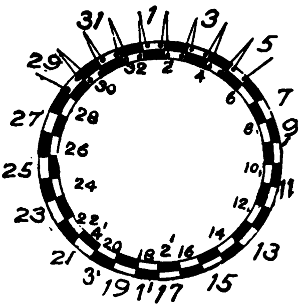

FIG. 33.

On the upper side, in both diagrams, the manner in which the coil ends are connected is shown by the lines running from the sides of the spaces not shaded, and which indicate the locations of the front sides of the coils. It will thus be seen in Fig. 32 that the *b* end of coil *1* is connected with the *a* end of coil *2*; the *b* end of coil *2* with the *a* end of coil *3*; the *b* end of coil *3* with the *a* end of coil *4*, and so on all the way around the circle.

In Fig. 33, coil *1* is located in the outside layer, and coil *2* is the under layer. Coils *3*, *5*, *7*, and, in fact, all the odd-numbered coils, are on the outside, while all the even numbers are in the inner layer. On this account, the connection of the ends alternates from upper to lower layer. This is clearly shown in the

figure, for the *b* end of coil *29* is connected with the *a* end of coil *30*, and the *b* end of this coil connects with the *a* end of *31*, thus the connections run zigzag from one layer to the other. The return side of coil *1* is at *1'*, which is one space less than half the way around the armature, just as in the winding shown in Fig. 30. Coil *2* is beside coil *1*, but is in the lower layer. It could be placed in the upper layer, but with this arrangement, the end connections would not be regular in appearance, for, if all the coils occupying one-half of the surface had their ends on the outer layer, those in the other half would be in the inner layer, and it would make the armature look lopsided to have one-half the connections coming from the surface and the other half from underneath.

If it is not perfectly clear that this would be the result, imagine, for a moment, that the coils numbered from *1* to *16* are on the outside layer, then their front ends will cover the right-hand side of the armature and their blind sides will cover the left-hand side of the outer layer. In this way the whole outside layer will be filled by the first half of the coils, and the second half, that is, from *17* to *32*, will necessarily be in the inner layer. With this arrangement, all the ends of the outside layer coils will be located on the right half of the armature, and the ends of the inner layer on the left half. This arrangement of the ends would not affect the course of the current through the wire, the only objection to it being that the appearance of the winding and connections would not be symmetrical.

If the coils were wound, as in Fig. 31, with the *x* coil under the *1* coil, the result would be that in Fig. 33, the return side of coil *1* would fill the space occupied by coil *17*, and the return side of coil *2* would occupy the space filled by coil *18*, while these coils, that is, *17* and *18*, would fill the spaces of *1'* and *2'*, respectively. With this arrangement, it can be seen that the connection between the ends of coils *16* and *17* would not pass from the inner to the outer layer, but would remain on the inner layer. As by this change, the coils *17* and *18* change places with coils *1'* and *2'*, it follows that all the coils above *18* would be changed; therefore, coil *32* would come on the outer layer, by the side of coil *1*, and at this point we should have two connections coming from the outside layer. We should thus have two points on opposite

sides of the diameter of the armature in which the regularity of the order of the end connections would be changed.

In one, the wires would come from the under layer, and in the other they would come from the outer layer, and this lack of uniformity would be likely to lead to the conclusion that there had been a mistake in making the connections. From these explanations of the difference between the several ways of arranging the coils in a two-layer winding, it can be seen that, if the order shown in Fig. 33 is followed, the appearance of the outer surface of the armature will be symmetrical and not only not lead to confusion, but, on the other hand, help to detect any misconnections; while, if any other arrangement is used, the appearance of the wire will be less workmanlike, and when inspected by one not familiar with arrangement of the coils may lead to the impression that the connections are incorrect.

Drum and ring windings are used for armatures of two-pole machines. The ring winding, without modification, except in the manner in which the coil ends are connected, is also used with multipolar generator armatures, but the winding generally used with the latter type is what is known as the formed coil winding, which is simply a modification of the drum winding; it is, in fact, simply a drum winding so changed as to bring the return side of the coils in the proper position with respect to the greater number of poles. If a machine has four poles, the lines of force will not pass from top to bottom of the armature, but will run from the top pole to the two side poles, and also from the bottom pole to the side poles. When we treat of multipolar machines we shall explain fully the winding of armatures with formed coils.

# CHAPTER VII.

## ARMATURE REACTION, AND SPARKING OF THE COMMUTATOR BRUSHES.

EVERY one who has had experience in the operation of electric generators and motors is aware of the fact that, if the brushes are rotated forward and backward through a small angle, a point will soon be found where the sparking is much less than at any other place, and this point is seldom on the line at right angles to the center line of the field poles. For example, if the machine is a generator, the position of least spark-

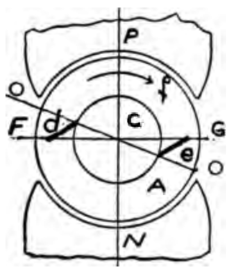


FIG. 34.

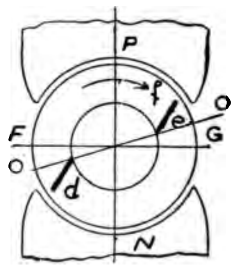


FIG. 35.

ing will be ahead of the right angle line, as is shown in Fig. 34, and if the machine is a motor, the position will be back of this line, as in Fig. 35. This line, *O O*, upon which the brushes must rest to run with the least sparking, is called the commutation line, and it is always in advance of the neutral line, *F G*, in generators and back of it in motors.

If we run an old style incandescent light machine with a very small load, the brushes will spark considerably, if they have been adjusted for a heavy one. If we readjust them so that the spark is reduced to the lowest point, we shall find that, as the load is increased, the sparking will increase. If we take a motor that is operated from an incandescent light circuit, and adjust the brushes so that they will run without sparking *when the load is light*, we shall find that they will show a consid-

erable spark when the load is increased. This difference in the magnitude of the sparks, between light and heavy loads, is not the same with all machines; with some it is so slight that no re-adjustment is necessary, but with others it is so great that unless

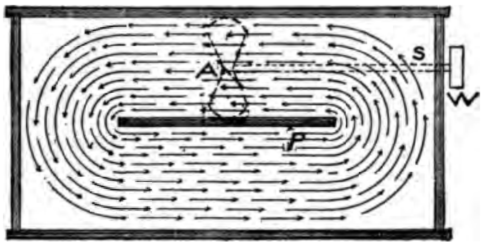


FIG. 36.

the brushes are reset, they may spark so as to injure the commutator. Properly designed machines should not show much difference in the size of the spark between full load and no load, but there will always be some difference. This difference is due

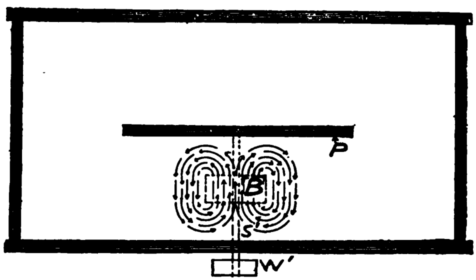


FIG. 37.

to the reaction of the armature upon the field, and in what follows we will endeavor to make clear the nature of this reaction.

Fig. 36 represents a water tank seen from above. *P* is a partition along the center line, which runs from top to bottom, so as to divide the tank into two channels. At *A* is located a screw

propellor, which is mounted upon the shaft $S$, this being provided with a pulley, $W$, by means of which it may be set in motion. If the propellor is rotated, it is evident that the water will be set in motion, forming a current, as is indicated by the arrows.

Now, suppose we remove the propellor at $A$ and place another one at $B$, as is shown in Fig. 37, this wheel having its axis at right angles to the former, as indicated by the shaft $S'$. If we place a belt upon the pulley $W'$, and rotate propellor $B$, it will develop two local currents, as is indicated by the arrows. If we now replace propellor $A$ and rotate the two at the same time, the direction of the stream of water will be as shown in Fig. 38.

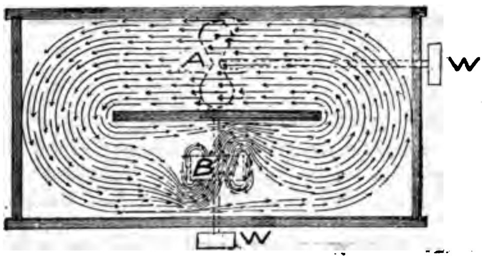


FIG. 38.

If $A$ is a very large wheel and runs at a high velocity, while $B$ is small and runs at a low velocity, the direction of the stream will not be diverted much in passing over the space occupied by $B$, but if the conditions are reversed, the deflection will be very great; so that the direction of the current passing through wheel $B$ can be made anything desired, from nearly parallel with the arrows, in Fig. 36, to nearly parallel with the arrows, in Fig. 37, by properly proportioning the two wheels and their velocities.

This action, which takes place in a tank of water with two wheels at right angles to each other, is the same as the action between the armature and the field of an electric generator or an *electric motor.* The propellor $A$ and the current developed by it representing the field coil and the magnetic lines of force induced by it, and the propellor $B$ representing the armature and the

magnetic lines of force induced by the current flowing through it.

The comparison can be made clearer by the aid of Fig. 39. This figure is simply an outline of a generator, *M* being the field magnet, *C* the core upon which the field is wound, *A* being the armature. If a current is passed through the field coil while the armature is stationary, and no current flows through it, the lines of force developed by the field coil will flow in a direction parallel with the line of arrows marked *D*, this line indicating the center of the stream. If we shut off the field current and pass a current through the armature wire only, this will set up lines of force in the direction of the arrow lines, *B B*. These two streams are the right angles to each other, just as are the streams of the two wheels in Fig. 38.

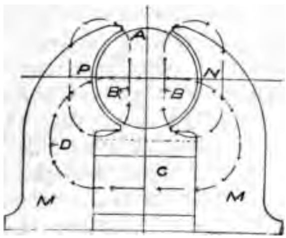


FIG. 39.

If we pass currents through the field and armature coils at the same time, we shall have the two magnetic streams developed simultaneously, and, as in the case of the water tank, the actual direction of the flow across the space occupied by the armature will be somewhere between the directions of line *D* and lines *B B*, as, for example, line *S S* in Fig. 40 (p. 53). If the field coil current is very strong and the armature current weak, the line *S S* will run nearly parallel with line *P N*, but if the conditions are reversed, the armature current being made strong and that of the field coil weak, the line *S S* may run at nearly right angles to line *P N*. In any case, however, the line *S S* is the actual direction of the magnetic lines of force passing through the armature.

*In the explanation* of the principles of armature winding, we *have seen that the* commutator brushes must rest upon the com-

mutator on a line at right angles to the direction in which the magnetic lines of force flow. In that explanation, we assumed that the lines of force ran parallel with the line *P N*, and therefore, that the brushes would rest upon the commutator on the line *F G*, but we now see that, as a matter of fact, the lines of force do not run parallel with line *P N*, but with line *S S;* therefore, the brushes must be located on a line at right angles to *S S*, that is, upon the line *W W*. Now the position of line *S S* depends upon the relative strength of the two streams of magnetic lines of forces developed, one by the armature and the other by the field; hence, if these two streams remain equal all the time, the position of *S S* will not change, but if they vary, it will change.

In actual machines, the number of lines of force developed by the field coils remains practically the same, but that of the armature stream is constantly varying. The strength of the magnetism induced by a current of electricity increases or decreases with the strength of the current, and as the armature current is continually changing, the strength of the armature magnetism is continually changing. If a machine is well proportioned, the strength of the lines of force developed by the field is many times greater than that of the armature magnetization; therefore, even when the latter is the strongest, it is weak by comparison, and as a consequence the line *S S* does not depart much from the line *P N*. When the construction is such as to produce this relation, changes in the strength of the armature current produce only small variations in the position of line *S S*, and on this account, if the commutator brushes are set correctly for full load, they will not be so much out of place for a light load as to make any perceptible difference in the magnitude of the sparks.

In Fig. 36 we can see that the velocity of the stream of water flowing over the space occupied by propellor *B* in Fig. 38 is the same at all points, that is in the center of the stream or at either side. In Fig. 38, however, the velocity of the current is much greater at the lower left hand corner and the upper right hand corner of the space occupied by wheel *B*. Now, this difference in velocity produces a difference in pressure. A chip dropped in the water near the upper left hand corner of wheel *B* would float around lazily and slowly pass over to right side; but if it were dropped in the lower corner, it would be picked up by the

current and be driven through to the opposite side at a high velocity. This is substantially the same as the effect upon the magnetism in the case of an electric machine.

In Fig. 40 the lines of force passing out of the *P* pole will be more dense below the line *P N* than above it, and on this account the magnetism at the lower corner will be stronger. If the lines of force developed by the armature are sufficient, the magnetism of the upper corner of pole *P* and the lower corner of pole *N* may be reduced to zero, while the strength of the other corners will be correspondingly increased.

In an electric motor, the position of the line of commutation is behind the neutral line *F G*, while in a generator it is in advance of it. The reason for this difference in position is that in

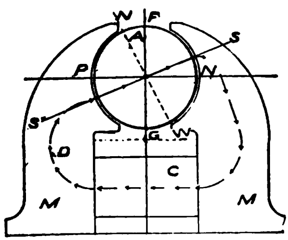


FIG. 40.

the motor the direction of the current through the armature is reversed, so that the lines of force induced by it, instead of flowing in the direction indicated by the arrows on lines *B B*, in Fig. 39, are just the reverse, hence the field lines *D* are depressed on the right side and raised on the left side.

From the foregoing, it will be seen that the nature of the reaction between the armature and the field, in electrical machines, is not in any way complicated or difficult to understand, but it is somewhat difficult to calculate just how much effect a certain number of turns upon the armature, with a certain strength of current flowing through them, will have.

If a man is not well enough versed in the subject to make such calculations, he can, nevertheless, understand that the great-

er the number of turns upon the armature the greater the ( and the smaller the number the smaller the effect; and knc this much, he can judge fairly well from the appearance machine whether it will give trouble by excessive sparkii not. If the field magnets are light in construction, and the ε ture is unusually large, and appears to have a great many of wire upon it, it can be safely inferred that it will spark l and that the brushes will require resetting, if the load is ν to any great extent. On the other hand, if the field is mε and the armature of moderate, or small size, with apparentl a small number of turns of wire, it can be safely assumec the sparking will not be serious.

Some people imagine that the proportions between the ε ture and field can be ascertained fairly well from the positi which the brushes set when running with the smallest sparl this is not a true guide, because the wires from the armature can be bent back or forward, one, two or three commutatoı ments, and thus make it appear that the commutation li nearly parallel with the neutral line *F G*, when in reality it i

The line of commutation is not exactly at right angl line *S S*; that is, it is not the line *N N*, but, in generato slightly in advance and in motors, slightly behind this line.

# CHAPTER VIII.

## SPARKING OF COMMUTATOR BRUSHES.

WE might give a long list of reasons why commutator brushes spark, and why they do not spark, but by such a procedure no light would be thrown upon the subject, because the reasons would not be understood unless fully explained. We therefore propose to explain the subject and let the reader tabulate the reasons after digesting the explanation of the principles involved.

Whenever an electric current is interrupted, a spark is produced, and it makes no difference how the current is generated or through what kind of a conductor it is flowing. To break a current without a spark is not possible; hence, if we desire to open a circuit without producing a spark, the only way to accomplish the result is by killing the current before the circuit is opened.

Brushes resting upon the commutator of a motor or a generator have to transmit to and from the armature the current that is generated, in the case of a generator, or the current that drives the machine in the case of a motor. If the brushes were made so narrow that they could make contact with only one commutator segment at a time, it would be impossible to run the machine without producing very destructive sparks.

To fulfill these conditions, the brushes would have to be quite thin, and the insulating separation between the segments rather wide, so that the width of the latter would be more than the width of the end of the brush. With these proportions, the brush could rest entirely upon an insulating strip and would not touch the adjoining segments. Commutators are not, however, made in this way. The insulation between the segments is narrow, and the brushes are wide enough to be always in contact with two or three segments, and part of the time with three or four.

Now suppose that the proportions are such that during most of the time the brush touches only two segments, as, for example, the proportions shown in Fig. 41. With these proportions, so long as there are two segments in contact with each brush, it is a

possibility for the current to be diverted through one of them only. Now suppose that, at the instant when the forward segment is passing from under the brush, all the current flows through the rear segment; then it is evident that the first named segment will break away from contact with the brush without making a spark, for there will be no current flowing from it to the brush, hence, no current to interrupt; and there can be no spark unless there is an interruption of a current.

All the foregoing is self evident, but it will be suggested that although the brush can break away from the front segment without producing a spark, it cannot do the same thing with the rear segment, for all the current is flowing through this one. This

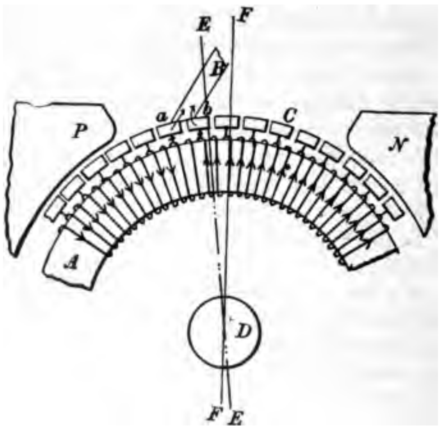


FIG. 41.

way of looking at the matter is not correct, however, for while it is true that when the forward segment passed from under the brush all the current was flowing through the rear segment, it is not true that the current continues to follow this path.

As soon as the front segment passes from under the brush, the rear one becomes the forward segment, and while it is advancing to the point where it must pass from under the brush, the current can be transferred to the next segment back of it, which now plays the part of rear segment. Thus we see

that to be able to run a machine without producing sparks at the commutator, all we have to do is to provide means whereby the current is transferred from one segment to the one back of it as the commutator revolves, so that when a segment passes from under the brush there is no current flowing through it. This result is accomplished more or less perfectly in all machines made by responsible firms. There are machines on the market that have been designed by men who are not well enough posted in the principles of electrical science to obtain proper proportions, and these are not proportioned so as to shift the current from the forward to the rear segment as fast as the machine revolves; such machines always produce more or less serious sparking.

If a machine is accurately made and the armature coils and commutator segments are properly spaced, and sufficient in number, it is possible to set the brushes so that there will be little or no spark at a given load, but if the current strength be increased or reduced, sparks will appear, and the more the current is changed the larger the sparks will be, the increasing current producing the greatest sparking.

How current is shifted from the front to the rear segment we will explain in connection with Fig. 41. In this figure, *A* represents a portion of the core of a ring armature. The shaft upon which it is mounted is shown at *D*, and *P N* are the corners of the poles between which it rotates. The small blocks *C* represent a portion of the commutator segments, which we have placed outside of the armature so as to make the diagram as simple as possible. For the same reason we have shown the armature coils as made of two turns of wire each. The line *F F* divides the space between the ends of the poles into two equal parts, and the line *E E* divides the armature into the two halves in which the direction of the induced currents is opposite. In all the coils to the right of line *E E* the currents are induced in a direction away from the shaft, and in all the coils to the left of line *E E* the currents flow toward the shaft, all of which is clearly indicated by the arrow heads placed upon the lines representing the coils. The outline *B* represents the end of one of the brushes, and from the direction in which it is inclined, it will be understood that the armature revolves in a direction counter to that of the hands of a clock.

When the armature is in the position shown, the current flowing in all the coils to the right of line *E E* passes to segment *b* and thus reaches the brush, while the current flowing in the coils to the left of line *E E* reaches segment *a* and through this passes to the brush. As the brush rests upon segments *a* and *b*, the coil with which they connect is short circuited, and, therefore, a current can flow in it in either direction or there may be no current. To be able to run without spark, or to obtain perfect commutation, as it is called, the current in this short-circuited coil, when in the position shown, should be zero or nearly so. This coil which is short circuited by the brush is called the commutated coil, or the coil undergoing commutation.

It will be noticed that this commutated coil is in a position just forward of the line *E E;* hence, the action of the pole *P* will be to develop a current in it that will flow in the same direction as the current in the coils ahead of it; that is, in the coils to the left. Now, if this current flowed through the brush, it would be in a direction contrary to that of the arrow at *a;* hence it would act to check the current flowing from the front segment *a* to the brush, and would divert it through the commutated coil to the rear segment *b*.

If the action of pole *P* upon the commutated coil is sufficiently vigorous, the current developed in it will be as strong as the current in the coils ahead of it, by the time the end of the segment is about to break away from the brush, and this being the case, there will be no current from segment *a* to the brush, and consequently no spark. If the action of pole *P* is not strong enough, then there will be a small current from segment *a* to the brush when they are separated, and as a result a small spark. If the action of pole *P* on the commutated coil is too vigorous, then the current developed in it will be too great, and it will not only divert all the current coming from the forward coils, through the commutated coil to segment *b*, but, in addition, will develop a local current that will circulate through the end of the brush and therefore when the separation occurs there will be a current flowing from the brush to the front segment, and *consequently* a spark.

*If the* commutated coil were placed astride of line E E the *action of pole P* upon it would be no greater than that of pole N.

so that no current would be developed in it while undergoing commutation. The further the coil is in advance of line *E*, when short circuited by the brush, the stronger the action of pole *P* upon it; therefore, the strength of the current developed in the commutated coil can be increased by moving the brush toward pole *P* and it can be decreased by moving the brush further away from pole *P*. Hence, by trial a point can be found where the current developed will be just sufficient for the purpose and no more.

This is true supposing the current developed by the armature to remain constant, but, if it varies, the current in the commutated coil will be either too great or too small. If, when the brushes are set, the armature is delivering a current of, say, 20 amperes, then the current flowing through the coils to the left of the brush will be 10 amperes, and the current in the commutated coil will also be 10 amperes.

If the armature current increase to 40 amperes, the current in the forward coils will be 20 amperes, and as that in the commutated coil will still be 10 amperes, it will have only one-half the strength required for perfect commutation. In practice, however, it is found that, if the commutator has a sufficient number of segments, and the proportions of the machine are such that the line *E E* remains practically in the same position for all strengths of armature current, then, if the brushes are set so as to run sparkless with an average load, they will run practically sparkless with a heavy or light load.

Even when a machine is properly proportioned, the brushes may spark badly if they are not set in the proper position, and with the proper tension. If the tension is not right, they will spark, no matter where they are set. If the tension is too light, they will spark because they will chatter and thus jump off the surface of the commutator. If the tension is too great, they will spark because they will cut the commutator and then the latter will act as a file or grindstone and cut away particles from the brushes, and these will conduct the current from segment to segment, as well as from the segment to the brush. Whenever a commutator is seen to be covered with fine sparks, some of which run all the way around the circle, it may be depended upon that the surface is rough, due in most cases to too much

pressure on the brushes, and the remedy is to smooth it up and reduce the tension and set the brushes where they will run with the smallest spark. When the brushes begin to spark they rarely cure themselves, and the longer they are allowed to run with a heavy spark, the worse they will get.

Two-pole machines in which gauze brushes are used frequently give trouble on account of the tension being so great as to cause the brushes to cramp and be dragged along by the friction against the commutator surface. This action is illustrated in Fig. 42, in which the dotted lines show the end of the

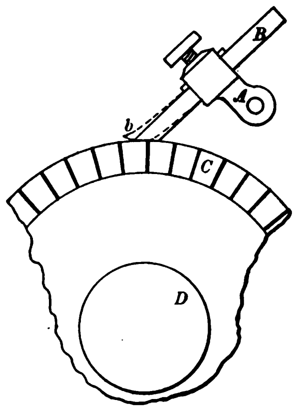


FIG. 42.

brush pulled forward by the friction against its end. Sometimes this occurs from using gauze brushes in brush holders that were originally made to hold copper leaf brushes. As the gauze is not very elastic, if it gets a bend it does not come back to its original shape; hence, in the course of time it gets badly out of line. To remedy this difficulty the best procedure is to place a strip of spring brass that will reach nearly to the end on top of the brush. Then, unless the tension is entirely too great, the brush will not be pulled forward by the friction on the end.

In the foregoing we have not given all the reasons why brushes spark, but these are the most common.

# CHAPTER IX.

## MULTIPOLAR MACHINES.

MULTIPOLAR generators or motors are machines that have more than two poles. The number of poles must always be even, that is, either four, six, eight or a higher even number, but never three, five, seven or any other odd number. The reason for this is that in any magnet there must be a positive and negative pole, a single pole magnet being a physical impossibility.

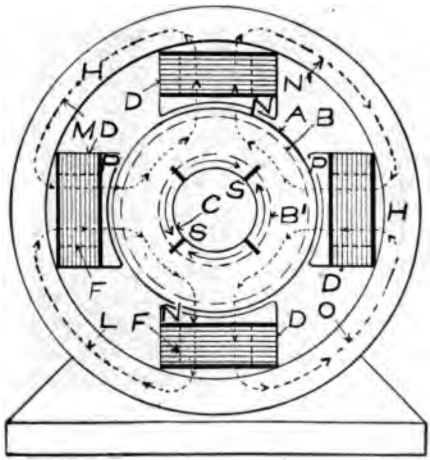


FIG. 43.

Multipolar machines have been made of many designs, but the general principle of construction of all can be explained by means of Figs. 43 to 50, which are diagrammatic representations of the type most commonly used. Fig. 43 represents a four-pole machine, which can be either a motor or a generator, according to whether it is supplied with an electric current or is driven

by some source of power. Fig. 44 represents a six-pole machine.

In Fig. 43 the outer ring *H* is the yoke of the several magnets which are completed by the poles *N P* and the cores upon which the field magnetizing coils *D D* are wound. As will be noticed, the top and bottom poles are negative, being marked *N*, and the side poles are positive, being marked *P*. The paths of the magnetic lines of force are as indicated by the dotted lines *L*, *M*. *N'*, *O*. From the position of these lines, it can be seen at once that, if any one pole is positive, the poles on either

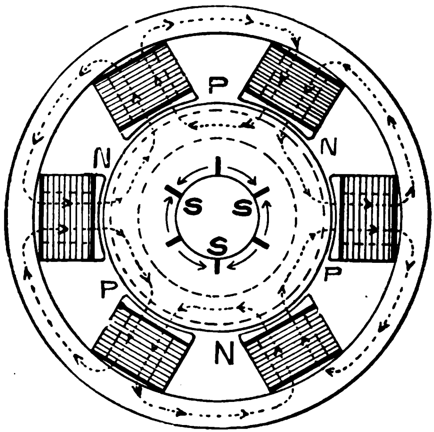


FIG. 44.

side of it must be negative, for the circuit of the lines of force could not be completed if this were not the case; thus it will be seen that in Fig. 44 the poles on either side of each positive are negative. Counting around the circle, we find that, if the first pole is positive, the second is negative, and the third again positive, and so on all the way around the machine. In Figs. 43 and 44 this is seen to be true, and it is true whatever the number of poles may be.

The circle *A* represents the outside surface of the armature, nd the circle *B* is the surface of the armature core. In mo

machines of the multipolar type, the armature core is made with grooves, into which the wire is wound; in such cases the circle $B$ would represent the bottom of the grooves. These grooved armature cores, when seen without wire, have the appearance of a wide-faced cogwheel.

The circle $C$ represents the commutator, and it will be noticed that in the four-pole machine, Fig. 43 there are four commutator brushes, and in the six-pole machine, Fig. 44, there are six brushes. A multipolar machine can be made so as to operate with two brushes, no matter what the number of poles may be, but, unless it is specially constructed for this arrangement, then the number of brushes must, in every case, be equal to the number of poles; that is, six for a six-pole machine, eight for an eight-pole machine, and so on for any other number of poles.

The only difference in construction between a machine that is adapted to run with two brushes and one that must have as many brushes as there are poles, is in the manner in which the armature coils are connected with the commutator. If the connections be such that the machine can run with two brushes, it is said to be series connected, and if it requires as many brushes as there are poles, it is said to be parallel connected. A series connected machine can be run with two brushes or with as many as there are poles, or any number between these two limits. In large generators, the number of brushes is generally equal to the number of poles, no matter what the type of winding. So far as external appearance is concerned, there is very little difference between a series and a parallel connected machine: there is a difference, however, and this will be clearly explained when we come to the description of armature windings for multipolar machines.

Each multipolar machine can be regarded, so far as its electromagnetic action is concerned, as a combination of two or more two-pole machines; thus, Fig. 43 can be considered as consisting of two two-pole machines, and Fig. 44 as made up of three two-pole machines. Looking at Fig. 43, we can see that the top and the right side poles, together with the half of the ring $H$ and the half of the armature opposite them, constitute a complete two-pole machine, and that the remainder of the armature

and field would make up another machine. If we could stretch the iron, so as to bend the half armature into a complete ring, and swing the two poles opposite each other, we could make two machines that would actually operate out of this single four-pole generator; but iron will not stretch; therefore, we must endeavor to show, by some more self-evident means, that Fig. 43 would make two two-pole machines. This we can do by the aid of Figs. 45 and 46.

In Fig. 45 the whole armature of Fig. 43 is shown, but of the field only the top and right hand poles are used. In Fig. 43 it will be seen that the ring *H* has a width equal to one-half of the core upon which the coils *D D* are wound. It will also

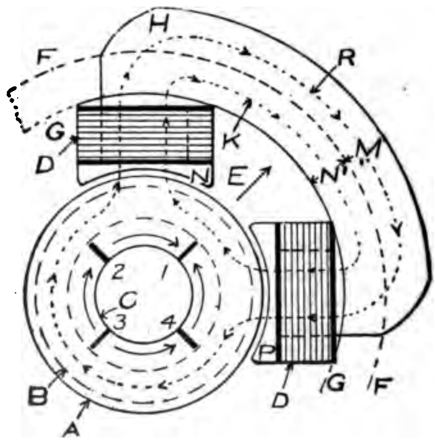


FIG. 45.

be seen that the armature core is of the same thickness as the ring *H*, the inner surface of the armature core being represented by the broken circle $B^1$. The reason why the cores are twice as wide as the ring *H* and the armature core is that they have to carry double the number of magnetic lines of force, as can be plainly seen since the lines that flow along the path *L*, as well as those along path *M*, have to pass through the core on the left side. It will be noticed that through each one of the cores and

pole pieces two sets of lines of force pass. Now, in Fig. 45 the two sets of lines of force have to pass from one pole to the other by a single route; hence, the portion of the ring $H$ that is used must be made of double the width, the addition being just as wide as the part $N^1$.

The armature core does not require enlarging, for, as is shown, the lines of force following the path $K$ traverse the upper right-hand portion of the armature coil, while those in path $R$ traverse the lower side. Since we have in this figure a positive and negative pole, we know, from the action of two-pole machines as already explained, that in all the wires opposite the top pole, currents will be induced in one direction, and that in all the wires opposite the side pole the currents will be induced in the opposite direction; hence, if the currents in the top part flow from brush *2* toward brush *1*, as indicated by the arrow, then the currents induced in the side portion will flow from brush *4* toward brush *1*.

If, with this machine, we were to place one brush at *1* and other brushes at the positions *2* and *4*, the current would pass out by the brush *1*, and would return by the brushes *2* and *4*, provided that these were connected with the return wire. The two brushes at *2* and *4* could be discarded and a single brush be placed at *3*, but, if we did this, the current would have to flow through the armature wire on the lower half from brush *3* to brushes *2* and *4*, as is indicated by the arrows, and this would represent a loss, as extra resistance would be placed in the circuit without giving any advantage, owing to the fact that the lower half of the armature, having no poles opposite it, generates no current.

A machine constructed like Fig. 45 would actually work, but it would be defective from a mechanical point of view, as the two poles, being on one side, would pull the armature in the direction of arrow $E$ with such force as greatly to increase the friction of the bearings, and in all probability cause them to cut badly. This defect we could overcome by changing the construction as in Fig. 46, for then we should have two field magnets opposite each other and the pull of one would be offset by that of the other.

The principle of construction shown in Fig. 46 has been used

to a considerable extent in practice, but it is not as good, mechanically, as that of Fig. 43, not being as rigid, and requiring more metal to do the same amount of work, as is clearly shown in Fig. 46, for the part *M* added to the ring *H* to give it the necessary width to carry the lines of force has more metal in it than the part *N* that it replaces; and, furthermore, the part *N* completes the ring and gives the requisite strength to the structure, while with the two magnets constructed separately, an additional frame will have to be provided to hold them in place.

In Fig. 45 it can be seen that the field consists of just one-half of the field of Fig. 43, and that, although the whole arma-

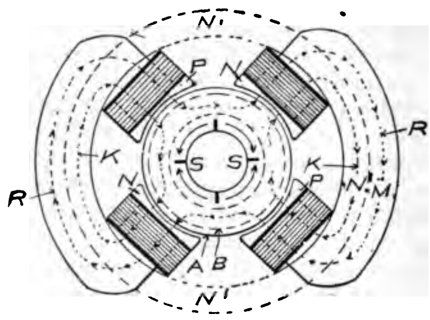


FIG. 46.

ture is used, only one-half of the wire on it is acted upon at a time, and the other half of the armature core, as well as the wire, serves only as a connecting link. A machine constructed according to Fig. 45 would be defective, mechanically, and would not be as efficient, electrically, as the more symmetrical design of Fig. 43. The path *K* of the lines of force, in Fig. 45, is of the same length as the paths in Fig. 43, but path *R* is about twice as long. Now, the amount of wire that must be wound upon the coils *D* to develop a given number of lines of force in the magnet will depend upon the length of the path in which the magnetism has to circulate, and as in Fig. 45 one-half of the magnetism traverses a much longer path, it follows that with the *same number of* turns of wire in the coils *D D*, the number of

lines of force will be less than in Fig. 43. On this account, Fig. 45 would not do quite one-half as much work as Fig. 43, and for the same reason Fig. 46 would be of a capacity somewhat lower than Fig. 43.

By the aid of Figs. 45 and 46 we have shown how the four-pole machine, Fig. 43, can be cut up into two two-pole machines, and in the same way we could show that Fig. 44 can be cut up into three two-pole machines, each one of which would be of a capacity slightly less than one-third of the whole machine. If it were not for the fact that the length of the magnetic circuit for about one-half of the magnetism is increased in these two-pole machines made out of a section of the multipolar machine, the capacity of each one would be equal to the whole machine divided by the number of machines; that is, each of the two machines made out of the four-pole generator would have one-half the capacity, and each of the three machines made out of the six-pole generator would have one-third the capacity of the whole machine.

It must be understood that in practice no one would think of constructing a machine after the design of Fig. 45. We have presented it here to show clearly that a multipolar generator, or motor, is simply a combination of several two-pole machines, and this we have demonstrated by showing how the multipolar design could be actually cut up into two-pole machines. To make this subject still clearer, let us examine the manner in which the currents are induced in the completed machines, and also in the sectional machines. Looking first at Fig. 43, we find that, in the portion of the armature that is opposite the upper pole, the current is induced in such a direction that it will flow from the brush on the left-hand side to the one on the right; that is, the current would flow out of the armature through the latter brush, which is marked *S*, and would return through the former.

From the elementary principles which we have explained in connection with the two-pole machines, we know that, if the armature wires passing in front of one *N* pole have currents induced in them in a certain direction, they will have currents induced in the same direction in passing in front of any other *N* pole, the direction of rotation of the armature being the same in both cases; therefore, in the wires that pass in front of the *N*

pole at the bottom of the figure, the direction of the induced currents must be from left to right when the pole is looked at from the center of the armature, and this is the same thing as from right to left so far as the diagram is concerned. If we turn the diagram upside down we will see that the current flows from left to right towards brush *S'*. To put the matter more clearly, since the top *N* pole induces currents that advance through the armature wire in the direction in which the hands of a clock move every other *N* pole must induce currents in a clockwise direction, and this we see is the case in the four-pole machine, Fig 43, and in the six-pole machine, Fig. 44; it is also true of Figs. 45 and 46.

The *P* poles in Fig. 43 induce currents that flow in a counterclockwise direction, and this is also the case in Fig. 44 and in Figs. 45 and 46. From all this, we see that the direction in which the currents are induced is the same in the completed machines of Figs. 43 and 44, and in the half machine, Fig. 45, and the separate magnet machine, Fig. 46.

In Figs. 43 and 44, the current flows out of the armature through the brushes marked *S* and returns through these intermediate. This order is also preserved in Fig. 46, but in Fig. 45, as we have shown, the current can return through the two brushes *2* and *4* or through brush *3*. The reason why the regularity is not preserved in this case is that the lower side of the armature between brushes *2* and *4* does not generate current, and the wire covering this portion serves only to keep the circuit closed for the balance of the wire in which the current is induced, Fig. 45, would work perfectly with brushes at *2* and *4* or a single brush at *3* or with the three brushes all in position, and in fact with any number of brushes between position *2* and *4*, on the lower left-hand side of the commutator, but upon the upper right-hand side there could be only one brush and this would necessarily be in the position of *1*.

# CHAPTER X.

## MULTIPOLAR MACHINES *(Continued).*

MULTIPOLAR machines, as can be readily seen from the designs already presented, are more complicated in construction than the two-pole—commonly called "bipolar" machine, and it may, therefore, be asked, why are such machines made? It is quite evident that they must possess some advantages over the simpler type, or they would not be in use, and since they are the only kind of machine made in large sizes, it is obvious that their advantages must be sufficient to more than offset the additional complication of construction.

One of the advantages of multipolar machines is that the pull of the poles under the armature can be made practically equal all the way around the circle, therefore, the bearings are not subjected to the side thrust that is liable to be present with the bipolar construction. Machines of the latter type, when of any size larger than 100 horsepower, are apt to exert a side pull upon the armature, unless the shape of the poles is accurately calculated, and this is difficult, except in machines of the design of Fig. 47, p. 71. With this construction, it is not necessary to be very particular as to the proportion of the poles, as the lines of force will, in any case, divide about equally, one-half taking the path $M$ and the other half the path $N$.

When, however, the field magnet is of the horseshoe type, the tendency is for the greater portion of the lines of force to pass through the nearer side of the armature, that is, through the side on which the magnet is located, and if this occurs, the shaft will be drawn in that direction. In some cases, in an attempt to obviate this difficulty, the poles are made extra massive at the ends and the armature is set slightly out of center; then it is possible to overdo the thing and pull the armature in the opposite direction. With small machines this side pull amounts to so little that no account is taken of it, as a general rule, but with increasing size it becomes serious, and in a generator of, say 300 or 400 horsepower, it might be sufficient to render the machine a failure.

This freedom from side pull of the armature is not the most important advantage of the multipolar design, in fact it is only one of the minor points of superiority; the great advantage is that, for a given capacity, the size of the machine can be reduced very materially. Small motors and generators of the bipolar type are compact when compared with the work they can do, but this is due to the fact that they are run at high velocities. Now the output of a motor or generator is proportional to the speed, therefore, if we have a motor that, when running at 1,000 revolutions per minute, develops 50 horsepower, its capacity will be cut in two, if the speed is reduced to 500 revolutions per minute, and it would only give 5 horsepower if run at 100 revolutions. Large generators cannot be run at very high velocities owing to the fact that they are generally driven by steam engines with which they are direct connected, therefore they can not run faster than the engine. High-speed engines run at speeds ranging between two and three hundred revolutions per minute, and these are used to run generators ranging in size from 100 to 500 horsepower. Larger machines are driven by slow-speed engines that run all the way from 120 to 60 revolutions per minute. From this it will be seen that two-pole generators, if used to run direct connected with the driving engine, would have to be of large size owing to the fact that the velocity is so low.

It is not easy to see at a first glance why a multipolar generator should be smaller for the same capacity than a bipolar machine, but this can be made evident by means of Figs. 47, 48 and 49, all of which are drawn to the same scale. In any generator, the e. m. f. that the armature can develop depends upon three things—the speed of rotation, the number of wires wound upon the armature and the strength of the magnetic field—that is, the number of lines of force. If these three factors remain unchanged, the e. m. f. will remain unchanged. In Figs. 47, 48 and 49 the armature speed is assumed to be the same and the armatures are identical in every particular—that is, they are of the same diameter and of the same width of face, and have the same number of turns of wire. Since the armatures are the same in dimensions and run at the same speed, it is clear that the e. m. f. *developed by them* will be the same, if the magnetic field in *which they rotate* is of the same strength.

Now in Fig. 47 there is but one magnetic field, and all the lines of force that cut through the armature wires must pass from pole *P* to pole *N*. In Fig. 48 there are four poles, therefore, if through each pair of poles the flow of lines of force is equal to one-half those that pass from pole to pole in Fig. 47, the total number of lines that cut through the armature wires will be just the same as in this figure, and the only difference will be that they will enter the armature through two places instead of one. Fig. 49 has eight poles, therefore the number of lines of force

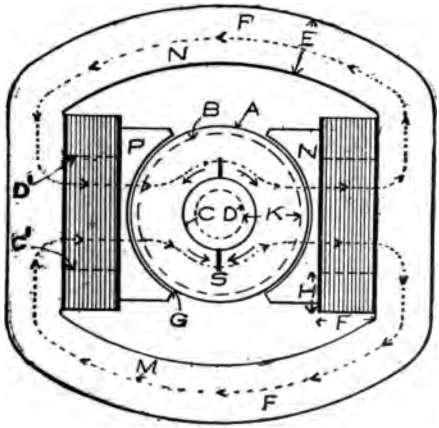


FIG. 47.

passing out of each *P* pole will have to be only one-quarter as many as in Fig. 47.

Since the armatures in the three machines are of the same size, and have the same width of face, the field magnets will be of the same width; that is, the outer rings, *F*, and the cores through the field coils and the poles will be of the same dimension measured in the direction of the shaft, therefore, the amount of iron in the armature cores and in the fields will be directly in proportion to the sizes of these parts as they appear upon the paper. *In machines* as actually constructed the cross-section of *the armature core* is made somewhat smaller than that of the

field magnets, owing, in part, to the fact that the iron used has a greater permeability, that is, can carry more lines of force, and, in part, to the fact that it is advantageous to magnetize it to a greater density than that in the field magnets. In this comparison we assume the armature core and the field magnet to be of the same section so as to simplify the matter, and as can be readily understood this does not in any way change the relation between the machines, since the same proportions of armature and field are taken in all. In Fig. 47, the width *E* of the outer field is the same as the width *K* of the armature core, and the width of the field cores within the

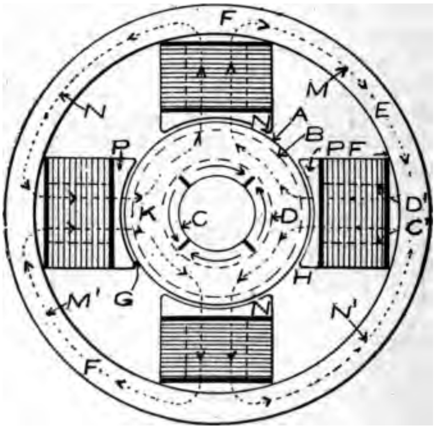


FIG. 48.

coils, that is, between lines *C′ D′* is just twice as great as *E* or *K*, this proportion being necessary, as through these parts the number of lines of force is doubled.

In Fig. 48, there are four paths for the lines of force, whereas in Fig. 47 there are only two, hence in the former figure, the number of lines of force flowing in each path is one-half as many as in the latter, and on this account the width of the field and armature core can be reduced by one-half. From this we find that *E* and *K* in Fig. 48 can be made one-half as great as in Fig. 47, and that the distance between lines C′ D′ is also just one-half. In Fig. 49 there are eight paths for the lines of force; therefore, the

number flowing in each one is one-half of what it is in Fig. 48 and one-quarter as much as in Fig. 47, and for this reason the widths *E K* and *C′ D′* can be decreased to one-quarter of what they are in the two-pole machine.

Reflection will show that in each one of these machines the same number of lines of force cut through the armature, the only difference being that, in the two-pole type, all the lines enter through one pole, while in the four-pole type they enter through two poles, and in the eight-pole type they enter through four poles. The number of lines passing out of the single *P* pole of Fig. 47 is twice as great as those that pass out of each of

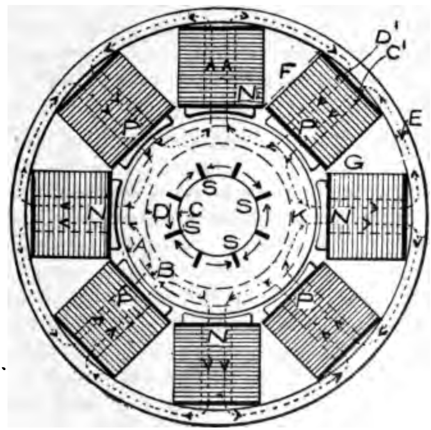


FIG. 49.

the two *P* poles in Fig. 48 and four times as great as those passing out of the four *P* poles in Fig. 49.

It is clear from the foregoing that in so far as the iron is concerned, the weight of the machine, Fig. 49, is about one-fourth of that in the machine, Fig. 47, but from the appearance of the diagrams we would say at once that in the eight-pole machine the weight of wire is greater, and such is actually the case; but as will be shown presently the wire can be reduced to the *same amount as in Fig. 47, or even be made less, by slightly increasing the iron.* Before considering this point, however, we

will show what is the relation between the weight of wire on Figs. 47, 48 and 49.

In each one of the diagrams, the number of turns of wire in the field coils is dependent upon the length of the paths in which the lines of force are located, and also upon the air space, or air gap, as it is called, between the pole faces and the surface of the armature as indicated at *G*. Now the air gap can be made smaller in Fig. 48 than in Fig. 47 and in Fig. 49 still smaller than in Fig. 48, owing to the fact that the armature reaction is less in these machines. The armature reaction is less, because in Fig. 47 all the currents flowing around the armature act against the field magnetism and tend to twist it around in the manner we have already explained in connection with the two-pole generators. In Fig. 48 only one-half of the current flowing through the armature wires acts against each pair of poles, and in Fig. 49 only one-quarter, hence the armature reaction is in the proportion of 1, 2 and 4.

Now the amount of wire that has to be wound upon the field coils to force the magnetic lines of force across the air gaps is a large proportion of the whole, for the reason that the resistance that air interposes in the magnetic circuit is about four or five hundred times as great as that of iron for the same length; in other words, 0.01 inch of air space offers as much resistance as 4 or 5 inches of iron. We say 4 or 5 inches of iron because the resistance of the air is constant, but that of the iron is not, thus, if it requires a certain amount of current through a coil to develop a field of 1,000 lines of force, in air it will require twice as much to develop a field of 2,000 and ten times as much for a field of 10,000, and so on for any other strength of field. With iron and steel, however, the relation is variable, so that if a certain amount of current flowing through the magnetizing coil develops a field of 1,000 lines of force, double this current will not develop double the number of lines of force. To obtain 2,000 lines of force may require three times the current and to get 3,000 lines of force may require ten or fifteen times the current for 1,000 lines. Owing to this fact, the iron is never magnetized as high as it can be but only up to the point where it is economical, and this is about where the resistance is to that of air in the proportion of one to four or five hundred.

## CHAPTER XI.

### MULTIPOLAR MACHINES; ADVANTAGES; WINDING OF ARMATURES.

ALTHOUGH the air gap $G$ in Fig. 47 is short compared with the balance of the line $M$, it will require more magnetizing current than the iron portion of the magnetic circuit. In Fig. 48, $G$ is smaller than in Fig. 47, but not much as we have assumed the amount of wire to be the same, hence, only the clearance between the outside surface of the armature and the pole can be reduced, and this only a little. The iron portion of the magnetic circuit in Fig. 48 is shorter than in Fig. 47, as can be seen by comparing the length of the lines $N$ in both figures. We thus see that a smaller amount of wire can be placed in each coil in Fig. 48 than in Fig. 47, and also that on account of the width $C'D'$ being reduced, the length of the turns is reduced, so that upon the whole there can be considerably less wire in each one of the coils of the four-pole machine than the two-pole.

In the same way we could show that the amount of wire in each one of the coils of Fig. 49 would be less than in the coils of Fig. 48, but the former machine has eight coils and the latter four, while the two-pole machine, Fig. 47, has only two coils, hence, unless the four-pole coils have one-half the wire of the coils of the two-pole machine the total amount of wire will be greater, and in the case of the eight-pole the wire in each coil must be reduced to one-quarter. From an examination of the three figures it is evident that the wire in the coils is not in the above proportion, for the product of the width $F$ by the depth $H$ will show only a small reduction in the cross section of the sides of the coils, and as the length of the turns is reduced only slightly by the decrease in the width $C'D'$, the difference in actual weight is not much more than the difference in the cross sections.

As wire, being made of copper is much more expensive than iron, it is necessary in order to keep the cost of manufacture down, to modify the proportions of the multipolar machine so as to reduce the weight of wire. From the electrical standpoint

this reduction is also necessary, for, if there is more length of wire for the current to traverse, more power will be lost in the machine, hence, its efficiency will be lower. This difficulty is overcome as shown in Fig. 50, in which a portion of the field of Fig. 49 is dotted in so as to show the difference in the proportions. In this last figure it will be seen that the armature core is made heavier, the width *K* being increased by moving the line *D'* to *D*. The cores of the field magnet are also widened; that is, the distance between the lines *C' D'* is increased, and the outer ring *F* is also made wider.

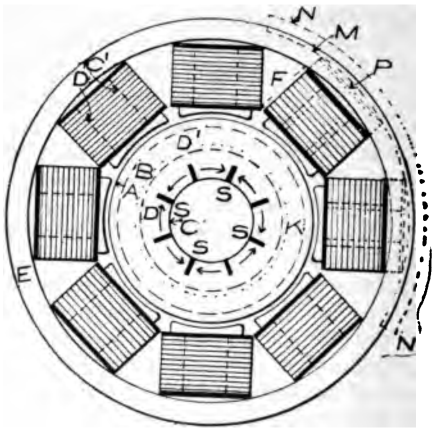


FIG. 50.

In consequence of these changes in the size of the iron cores, the amount of wire in the field coils is reduced, for as the cross section of the field is increased it does not have to be magnetized to so high a point, hence, less magnetizing force is required. As the field coils are made smaller, the outer diameter of the field can be reduced as can be seen by the dotted lines *N M* which show the position of the outer ring in *Fig. 49*. The wire in the field coils can be still further reduced *by increasing* the number of turns wound upon the armature, *for by increasing* these, the strength of the field can be corre-

spondingly reduced, and with the greater number of poles it is possible to increase the wire on the armature owing to the fact that the armature reaction is reduced, as explained in a preceding chapter.

From this explanation, it can be seen that, by means of the multipolar construction, the weight of a machine for a given capacity can be reduced and that the greater the number of poles, the greater the reduction. It can also be seen, however, that skill is required on the part of the designer to effect the greatest saving in weight as well as in size, for, if the iron and wire are not properly proportioned, we get a spider-like construction as is shown in Fig. 49, which, while lighter, is not much smaller than Fig. 47 and is certainly defective on account of requiring more wire for the field coils.

The proportions of Fig. 49, we have seen, are reached in endeavoring to reduce the weight of iron to the greatest extent, but by making the gain in this direction slightly less, as in Fig. 50, we can greatly reduce the amount of wire and at the same time reduce the size of the machine, and give it a compact, instead of a sprawling, appearance. Fig. 50 is not a perfectly proportioned design, by any means; it is given to show in what way the designer works to take advantage of the reduction that can be effected in size and weight by the multipolar construction, but since in this figure we have not increased the turns of wire upon the armature, the field is not reduced to the smallest possible dimensions; in fact, it is far from it.

Notwithstanding, however, that Fig. 50 is not as compact as it could be made by a careful calculation of the various parts, it is compact enough to show clearly the gain in size as well as weight over the two-pole type, Fig. 47, and the eight-pole type. A sixteen-pole machine would be still smaller and lighter, but in practice machines are seldom made of more than eight or ten poles, unless very large, as when the number of poles is increased the commutators have to be made correspondingly large and the difficulties of keeping the sparking down to safe limits are increased. These points we will explain fully in a later chapter, but before taking up that part of the subject, we will explain the winding of multipolar armatures and the way in which they are connected with the commutator.

## WINDING MULTIPOLAR ARMATURES AND CONNECTION WITH THE COMMUTATOR.

In a bipolar generator, if the current flows through the armature wires in a direction toward the commutator end on the side opposite the positive pole, it will flow away from the commutator, on the side opposite the negative pole. If the machine is of the multipolar type, the direction of the current will be the same opposite all the positive poles, and in the reverse direction opposite all the negative ones; that is, if under one positive pole the flow is toward the commutator end, it will be toward the commutator end under all the positive poles, and away from the commutator end under all the negative poles.

If we have a six-pole generator, there will be six brushes resting upon the commutator and the connection of the armature coils with the commutator segments must be such that, if the current flows out of the armature through brush number one, it will also flow out through brushes three and five, while it will return through brushes two, four and six. If the armature is of the ring type and is wound in the same manner as a ring for a two-pole machine, and the connections between the armature coils and the commutator segments are made in the same order, the currents will flow in the poper direction toward the brushes, no matter how many poles there may be.

That this is true can be made clear by means of Fig. 51, which represents a ring armature with the coils connected with the commutator in the same manner as for a two-pole machine, and as can be seen from the arrow heads upon the wires the connection is correct for a six-pole machine, and would also be correct for a four-pole, or an eight- or ten-pole, or any other number of poles. In this diagram, the outer ring *A'* represents the armature and the inner ring *C* is the commutator. The arrows drawn around the outside of the armature indicate the direction in which the currents must travel in order that they may reach the proper brushes. The current entering the armature coils at *B* must divide and traverse the coils on either side flowing toward points *A* and C. In the same way the current entering at point *D* must pass toward C, on the right, and toward *E*, on the left, while the current entering at F

t flow toward $E$ and $A$. If the sixth of the armature be-n points $A$ and $B$ is under a positive pole, the sixth between ıd $D$, and between $E$ and $F$, will also be under positive poles: in these three sections the current must flow in the same :tion; that is, either to, or from, the commutator end. ‹ing at the arrow heads upon the lines that represent the we find that in these three sections they all point away ı the center, and further that in the intermediate sections all point toward the center, thus showing not only that the

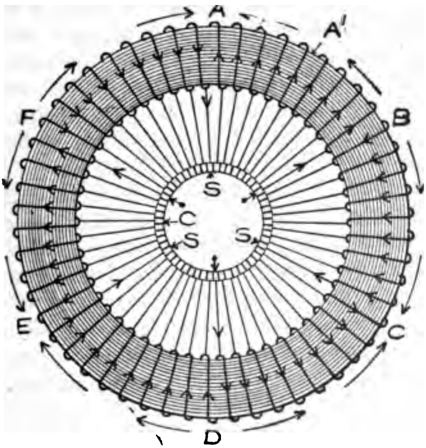


FIG. 51.

ents flow in the proper direction, in the sections under the tive poles, but also in those under the negative poles.

This type of winding is called parallel, owing to the fact the several sections of the armature are placed in parallel tion. As will be seen, the line current on entering the arma-: has to divide into three branches so as to enter through three brushes $S$ $S$ $S$, and the current leaves the armature hree branches which have to be joined to the opposite side he line. As only one-third of the whole line current enters ıgh each brush, it can be seen, at once, that the armature

can generate a current of three times the strength that it would, if there were only two brushes, for then all the current would enter the armature wire through one brush; hence, with the same strength of current flowing through the armature wires, the line current with six brushes would be three times as great.

If we look further into the matter, we shall find also that each current passes through only one-third as many coils as it would, if the armature rotated in a two-pole field and there were only two brushes, and as the e. m. f. induced in the armature is directly in proportion to the number of turns of wire through which the current passes, it follows that with the six brushes the voltage will be only one-third as great as with two, so that we shall get three times the strength of current but only one-third the voltage. Now, it is often necessary to obtain as high an e. m. f. as possible; therefore, it is desirable to be able to so connect the armature coils that the voltage may be as great as it would be in a two-pole machine, and it is evident that this can be done, if we can so connect the coils that the current will pass through all of them in succession. If we do this, however, we shall necessarily cut down the current strength, as there will then be only one path, so that we shall return to the same state of affairs that we would have in the two-pole armature; that is, we shall get the same voltage and the same current strength.

When an armature is wound so that the current passes successively through all the sections under like poles, it is said to be connected in series. The first impression would be that to accomplish this result all we would have to do would be to pass the current through one section first, and then through another and so on to the end, but this arrangement cannot be followed. Suppose we passed the current into the armature through the $S$ brush opposite $C$, and then took the current coming out through brush at point $B$ and passed it into the armature again at point $A$, and then took the current coming out at point $F$ and passed it back again through point $E$ and finally took a current to the line from point $D$. Now in this way it would appear that the e. m. fs. developed in the three sections of the armature would be added to each other and that the voltage of the current coming out at $D$ would be three times as high as that coming out at $B$, but if we examine further, we shall find that the connection

between the brushes at points *B* and *A* would result in short circuiting the armature coils in this section, and as a result the current flowing in them would be so great that it would burn out the insulation, and destroy the armature, and this would be true of the other two sections.

The only way in which the coils of the several sections can be connected in series. is one at a time. After the current has passed through one coil in the first section, it must pass to the second section and pass through one coil there, and then go to the third section and pass through another coil. When the current has traversed one coil in each section, it can pass through the second coil of the first section, and through the second coils of the second and third sections, and from here go to the third coil of the first section, and so on all the way around until all the coils have been traversed. The way in which the coils are connected to accomplish this result is shown clearly in Fig. 52. Only a few of the coils are shown connected so as not to make the diagram too confusing, but these are sufficient to illustrate clearly the order in which the connections are made. As in Fig. 51, the outer ring represents the armature and the inner one the commutator, *a, b, c, d, e,* etc., being the armature coils.

As can be seen from the arrows drawn around the outside of the armature, and from the number of brushes, the armature is intended for a six-pole machine. Now in a six-pole machine there will be three positive and three negative poles; therefore, the sections of the armature in which the currents flow in the same direction will be one-third of the circumference apart—that is, reckoning from center to center of the sections. From what has been said as to the manner in which the coils must be connected, it will be understood that coil number one of the first section will be just one-third of the circumference from coil number one of the second section, and this latter coil will be one-third of the circumference from coil number one of the third section.

Suppose that we consider coil *a* to be the first coil of the first section, then the end that winds over the outside of the armature we will connect with the commutator segment directly under it by means of wire *1*. The other end of this coil, which winds over the outside of the armature in the opposite direction, and

returns through the inside of the ring we connect by means wire *2* with the commutator segment marked *r*, which is or third of the circumference ahead of the segment to which wi *1* is connected. From this same segment we run wire *3* to t first coil of the second section of the armature, this coil bei marked *b*. The other end of coil *b*, which we will call t

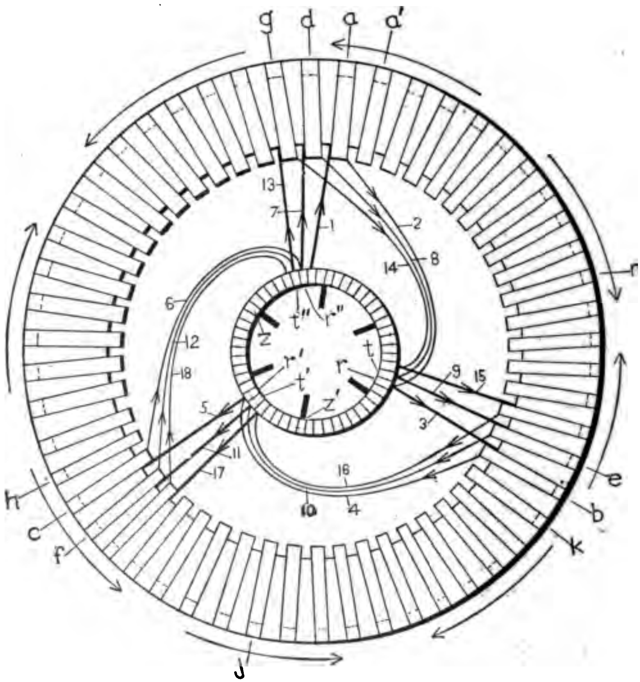


FIG. 52.

*back end*, we connect by means of wire 4, with the commutat *segment r'*, which is one-third of the circumference ahead of. *From segment r'* we run a wire 5 to the front end of the *oil of the* third section of the armature, this coil being m

*c*. The back end of *c* we connect by means of wire *6* with commutator segment *r''*, which is just back of the segment to which the front end of the first coil of the first section is connected. From segment *r''* we run a wire *7* to the front end of coil *d*, which is the second coil of the first section of the armature. The back end of coil *d* we connect by means of wire *8* with segment *t*, and from this segment run the wire *9* to the front of coil *e*, which is the second coil of the second section of the armature. The back end of coil *e* we connect by means of wire *10* with segment *t'*, to which the front end of coil *f* is connected by means of wire *11*. Coil *f* is the second coil of the third section of the armature, and its back end is connected with segment *t''* by means of wire *12*.

In the foregoing we have traced the connections twice around the circle, and by so doing have connected in their proper position the first two coils of each section of the armature. We started from wire *1*, which connects with the front end of coil *a*, and reached the commutator segment *t''*, which is connected with the back of coil *f* and the front of coil *g*. It will be noticed that in this type of connection, as well as in all those that we have explained, for two-pole as well as multipolar armatures, two coils are connected with each commutator segment, and this arrangement is absolutely necessary, for without it a continuous connection between the coils could not be obtained.

Since there are two coils connecting with each segment, it is clear that the current on entering from the brush can flow through both halves; thus, if segment *t''* were in contact with a brush, the current could flow into the armature through wire *13* and also through wire *12*. The current passing through wire *12* would retrace the path we have followed and come out at wire *1*, and continuing from here would pass through the coils ahead of *a*, as *a'* and the succeeding ones, after going through the coils ahead of *b* and *c*. The current passing through wire *13* would flow through coil *g* and then through the coil back of *e*, and through the coil back of *f*, and so on around the circle. As the two currents would be flowing at the same time, they would meet each other, head on, after passing through a certain number of coils. This meeting point would be where the othe

brush would be located, and where the current would leave the armature.

Suppose that only two brushes were resting upon the commutator, and that one was in contact with the segment to which wire *1* is connected, and the other in contact with segment *z*, then the current flowing through wire *14* from the top segment would traverse all the coils in the sixth of the armature to the left of coil *a* and all the coils between coils *h* and *j*, and all the coils between *k* and *m*; while the current passing through wire *1* would traverse the remaining coils. The two currents would meet at brush *z* and pass together out of the armature. If the brush *z* were removed to the position *z'*, then the currents would meet at this point and the only difference would be that one of the currents would traverse one coil too many, and the other one, one coil too few. If six brushes were used, placed at the points where located, the current would enter through three and leave through the other three. The effect of using six brushes would be to short circuit one coil between each pair of brushes, but this would not be a serious matter if the armature were wound with a large number of coils; it would, however, with a small number of coils.

With large generators, the number of brushes is generally made equal to the number of poles, so as to reduce the density of the current through each brush, the advantage thus gained being more than enough to offset the disadvantage arising from short circuiting a few coils. To make this point clear, suppose that the commutator is of such width that four brushes 2 inches wide can be placed side by side; then, if only two sets of brushes are used, all the current must pass through these four brushes, but, if the machine is eight-pole and there are eight sets of brushes, the current will enter through four sets, which would be sixteen brushes. When only two sets of brushes are used, the commutator is made with a wider face, but the width would have to be increased four times to get the same number of brushes in the case of an eight-pole machine, and such an increase would make a decided difference in the cost of the machine, as well as its size.

It will be noticed in Fig. 52 that, after the connections have passed once around the circle, a coil is reached that is one back

of the starting point. This order is not absolutely necessary; we may land one coil ahead of the starting point, as well as one back. Generally, the number of coils is so proportioned that by equal spacing we come to a coil one in front or one back of the starting point. For example, if we have a six-pole armature with 119 coils, and space the connections 40 coils apart, we shall come out one ahead, since three times 40 is 120; but if the armature has 121 coils, we shall come out one coil back of the starting point. If the armature has 120 coils, we can make the connections come out correct by making two of the spaces 40 coils and the other either 39 or 41 coils, the first bringing the connection one back of the starting point, and the last bringing it one ahead.

# CHAPTER XII.

## DRUM-WOUND MULTIPOLAR ARMATURES.

AS WE have shown in Chapter XI, the winding of ring armatures of the multipolar type is the same as that for bipolar machines, and, in the case of parallel winding, the connections with the commutator are the same.

When the armature is connected in series, the connections with the commutator segments have to be varied materially. A drum-wound armature connected with the commutator in the proper manner, for a two-pole machine will operate in a multipolar field with any number of poles; but its operation will not be satisfactory, owing to the fact that in the greater portion of the wires the e. m. fs. will act against each other. By properly readjusting the connections between the armature coils and the commutator segments, a two-pole drum armature can be made to operate perfectly in a multipolar field, but better results can be obtained by making the armature coils so as to correspond to the number of poles.

In a two-pole drum armature, the coils are wound from one side of the diameter to the other, simply because the positive and negative poles are on opposite sides of the circle, but in a four-pole machine the positive and negative poles are only one-quarter of the circle apart; hence, the proper relation of the sides of a coil will be one-quarter of the circle apart. If the armature is for a six-pole machine, the positive and negative poles will be separated by one-sixth of the circumference.

Let the circle in Fig. 53 represent an end view of a six-pole armature; then we know that, if there is a positive pole at the top, there will be a negative pole just one-sixth of the circle to the right of it, and if the coil *a* has one side directly on top, its other side can be located just one-sixth of the circle to the right or to the left. It might also be located three-sixths of the circle ahead, or five-sixths, for at any one of these three places it would be in the center of a negative pole. It can be seen at once, however, that the nearer the two sides are to each other, the shorter the connection wire at the ends of the armature; that is, the

less the length of wire in a turn, and it is clear that, on this account, the best position for the return side of the coil is just one-sixth of the circle either to the right or to the left.

From this explanation it can be seen that, if the currents induced in the wires at the top of the armature are directed from back to front, as is indicated by the arrows, the direction in the wires to the right will be from front to back (assuming that the armature rotates in a six-pole field, so that there may be a positive pole at the top and a negative at the point where the other side of the coils is located). Such being the case, if the whole armature is wound with coils such as *a, b, c,* the currents induced in them will all be in the proper direction, and

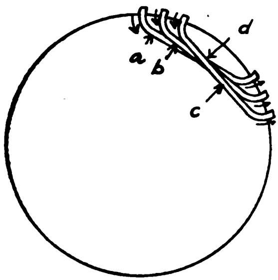


FIG. 53.

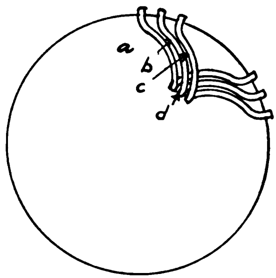


FIG. 54.

if the ends of the coils are properly connected with the commutator, the action of the machine will be perfect.

Coils of the form shown in Fig. 53 would not be mechanical, because they would pile up on top of each other where they cross, as shown at *d*. Not only would the ends of the armature look unsightly, as if the work had been done by a novice, but the wire would not be well supported, and, as a result, would soon work loose and chafe the insulation, thus becoming liable to injury by being short circuited. By giving the coils the form shown in Fig. 54, they can be made to fit snugly into each other, so that the end of the armature will look ship-shape, and in addition the coils will be secured firmly, so that there will be no danger of wearing off the insulation.

Coils such as are shown in Fig. 54 are formed by means of suitable clamps, are then placed upon the armature in their finished shape, and are held in place by bands, wedges or clamps, according to the type of armature. As they are not wound directly upon the armature core, but are made upon a separate apparatus, they are called formed coils, and armatures upon which they are placed are said to have a formed coil winding. The coils in Fig. 54 have the ends bent down toward the shaft, but it is also customary to make them with the ends resting upon the cylindrical surface of the armature core, or upon a projection of the surface. The first type of coils are sometimes called radial end coils, and the second, barrel coils.

Armatures wound with formed coils can be connected either in series or in parallel. The series winding must be a wave winding and the parallel may be either a wave or a lap winding. The reason why these names have been adopted will become evident when we treat fully of the manner in which the the connections with the commutator segments are made, the diagrams furnished in that connection showing clearly why the names were suggested.

When a generator is large, the coils are, as a rule, made of but a single turn; we can, therefore, with perfect proprietory use diagrams showing single-turn coils to illustrate the manner in which the connections are made for the series and parallel windings. Such diagrams are presented in Figs. 55 and 56, the first being a series winding and the second a parallel winding, both being for six-pole armatures. The solid lines *1*, *2*, *3*, etc., represent the front ends of the coils, and the dotted lines *1'*, *2'*, *3'*, etc., represent the back ends.

In Fig. 55, which represents a series winding, we can see that the right-hand side of each of the three sets of coils is opposite a pole of the same kind that is either positive or negative. Now, since such is the arrangement of the coils, it follows that, if in the *a* side of coil *1* the current flows from back to front, it will also flow from back to front in the *b* side of coil *2*, and in the *c* side of coil *3*. In the other sides of these three coils the current will flow from front to back. Remembering the facts and starting from coil 1, at the *a* side, we shall find that the current will pass through the front end, from side *a*

to side *a′* of coil *2*, and, flowing to the back of the armature through the latter side, will pass, by the dotted line *1′*, to side *b*, flowing through this side from back to front. From *b* the current will pass over the front of the armature to *b′*, and flow through this wire to the back of the armature, and then pass, by dotted line *2′*, to *c*. Coming to the front, through *c*, the current will pass through *3* to *c′* and flow through this to the back and cross through dotted line *3′* to *d*.

As will be perceived, *d* is a coil that is just one back of the starting point *a*; hence, the principle of winding in this case is the same as in the series connection with the ring winding, and whatever difference there is, is wholly in appearance and is due to the difference in the form of the coils. In the series ring

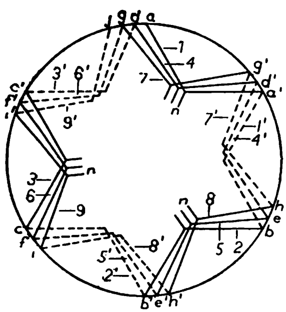

FIG. 55.

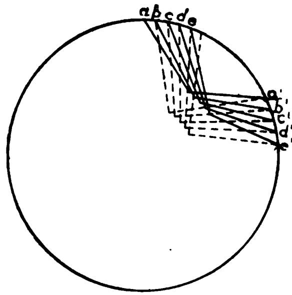

FIG. 56.

winding, the return side of each coil is connected with a coil that is one-third of the circle ahead of it, while, in the formed coil winding, the advance is only one-sixth of the circle.

To account for this difference, we must observe that, in the ring winding, the return side of the coil is within the armature ring and directly under the other side, while in the formed coil winding, as can be clearly seen in Fig. 55, the return side of the coil is on the outer surface of the armature, and is one-sixth of the circle ahead of the other side; therefore, if this end is advanced *only one-sixth* of the circle, it reaches a point *just one-third ahead of the* entering side of the coil—that is, if we *measure from a′ to b*, the distance will be one-sixth of the circle.

but if we measure from *a* to *b*, the distance will be one-third, just as in the case of the ring winding.

In Fig. 55 a sufficient number of coils is shown to carry the connections three times around the armature, but from these it can be seen that, if all the coils were in place, and we followed the path, turn after turn, around the circle, we should finally reach the starting point, just as in the case of the ring coil winding. The lines *n, n, n,* leading from the ends of the coils, are connected with the commutator segments; therefore, if two brushes are placed upon the commutator one-sixth of the circle apart, as with the ring winding, the current will enter through one of them and leave through the other. If six brushes are used, the current will enter through three and pass out through the remaining three.

From all this it can be seen that the series winding is the same, so far as the connections between the armature coils and the commutator segments are concerned, for the formed coil and the ring windings; that is, the direction in which the currents flow through the wires, upon the outer surface of the armature, is the same in both cases. As in the ring winding, the distance between the coils must be properly proportioned to the number of poles, and the number of coils must be such that when the connection is traced all the way around the circle we shall come out, not at the starting point, but either one coil ahead or one behind. The two spaces *a, a′* and *a′ b* need not, however, be equal, but their sum must be such that when multiplied by three it will equal an amount, one more, or one less, than the total number of coils.

As with this type of winding both sides of the coil are on the outer surface, it follows that the number of coil sides cannot be odd, but with a ring winding it can. Thus in the latter winding we can have 59 or 61 coils for a six-pole machine and by spacing the connections 20 coils apart we shall, after the turn is completed, come out one coil back of the starting point, in the case of 61 coils, and one ahead, in the case of 59 coils. With the formed coil winding, thirty coils would give sixty coil sides on the armature surface, and as we could only change the number of coils to 29 or 31, the number of coil sides would be either 58 or 62.

Distances *a, a'* and *a', b,* between the sides of the coils, are called the pitches, the first being the front pitch or connection pitch, and the second the back pitch or coil pitch. With a series winding it is impossible to make the connections come out right unless the pitches are odd; that is, there must be an odd number of coil sides between *a* and *a'* and also between *a'* and *b,* but the two pitches need not be equal; one may be two sides more than the other, if desired. The number of coils must, in every case, be odd, if the pitches are unequal, and even if the pitches are equal; therefore, the number of coil sides must equal an odd number of pairs, for unequal pitches, and an even number of pairs for equal pitch, and as 58 is equal to 29 pairs and 62 is equal to 31 pairs, each of which is an odd number of pairs, the pitches must be unequal.

Suppose that we have 29 coils, giving 58 coil sides; dividing this by three we find the nearest whole number to be 20, and as the coil pitches cannot be even numbers we cannot make them 10, but as the two can differ by 2 we can make the forward pitch 9, and the back pitch 11, thus giving us unequal pitches, as required for an odd number of coils. If we now proceed to space the armature, we shall find that after the first circuit we shall land just two spaces ahead of the starting point. The second circuit around the armature will bring us out four spaces ahead of the starting point, and the third circuit, six spaces ahead. The fourth circuit will bring us eight spaces ahead of the start, and the fifth will carry us to the tenth space. Now the front pitch is nine, so that the fourth circuit reaches a coil just one space back of *a'*. and the fifth circuit passes one ahead of it.

If the pitch had been made 10 or 8, or any other even number, we should have been able to connect only half the coils, as will be found by trial; but by making the pitch odd, we can continue the circuits of the connections until all the coils are connected.

Now suppose that we make the two pitches equal, both being 11 spaces, then there will be 6 times 11 equals 66 spaces in a complete circuit, and the total number of coils will have to be either 32, equal to 64 spaces, or 34, equal to 68 spaces. With 32 coils the first circuit will carry the connection two spaces ahead of the starting point, and with 34 coils it will land two spaces back

of the starting point. In both cases, however, the connections can be carried around until all the coils are connected because, the pitches being odd, the side $a'$ will be passed by; the fifth circuit reaching the tenth space, and the sixth circuit the twelfth space.

From the foregoing it can be realized that the manner in which the coils are connected for a series winding is very simple. As we have said, this type of connection is also called a wave winding, and from the appearance of Fig. 55, the reason why the name was suggested can be readily seen, for the connections circle around the armature in wave lines.

Parallel winding for formed coils is as shown in Fig. 56, and it is so simple that it requires little explanation. As in Fig. 55, the full lines indicate the front connections, and the dotted the back connections. Starting from side $a$, of the first coil, the front connection leads to side $a'$ of the second coil, and from here the back connection leads to side $b$. The front connection leads from $b$ to $b'$, and the next back connection runs from side $b'$ to side $c$ of the third coil.

If all the coils were placed upon the armature, and the connections were continued in this order, we should finally return to side $a$ of the first coil. As in the series winding, the pitch between the two sides of the coil—that is, between $b$ and $a'$—must be an odd number, for, if not, the winding would come to an end when half the coils were connected. Also the back pitch must be 2 less than the forward pitch, so that coil $c\ b'$ is two spaces ahead of $b\ a'$, and $d\ c'$ is two spaces ahead of $c\ b'$. The reason why the connections have to advance two spaces is, that each coil has both sides upon the surface of the armature, hence to advance one coil we must move two spaces.

From Fig. 56 it can be seen that the name lap winding is suggested from the fact that the coils lap over each other. The lap connection can be made with any number of coils, and any pitch that is odd, and the front pitch must always be two greater than the back pitch.

# CHAPTER XIII.

## Forming of Armature Coils and Their Position Upon the Armature.

IF A GENERATOR is of very large size, the coils are generally made of but one turn. Sometimes round wire is used in their construction, but, as a rule, they are formed of flat rods. Pieces are cut of proper length to make a coil and these are bent edgewise into the form of a narrow and long U. They

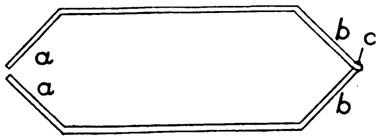


FIG. 57.

are then turned up on edge and are given the form shown in Fig. 57, if intended for a lap winding, and that of Fig. 58, if for a wave winding. For a lap winding the coil is slightly shorter

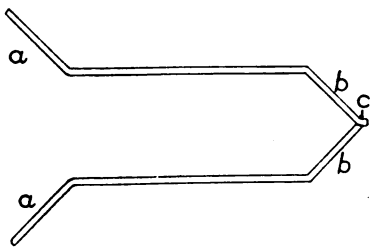


FIG. 58.

than for the wave winding, owing to the fact that the ends *a a* are not so long for the former.

Some builders make the wave winding coils with one of the *a ends straight, but in that* case the other end is somewhat longer *and is bent around at* a greater angle so as to keep the distance

between the extreme ends the same as when both ends are bent out. If the armature has extensions at the sides to hold the coil ends, these are left as in Figs. 57 and 58, but when the armature has no such extensions, the ends *a a* and *b b* are bent down at right angles to the sides of the coils as illustrated in Fig. 64, p. 98, which represents a coil of several turns in process of construction.

Single turn coils are connected with the commutator in the manner shown in Figs. 59, 60 and 61. Fig. 59 is the arrangement when the connections are for a wave winding, the other two figures showing lap windings. If we examine coil *a a*, we

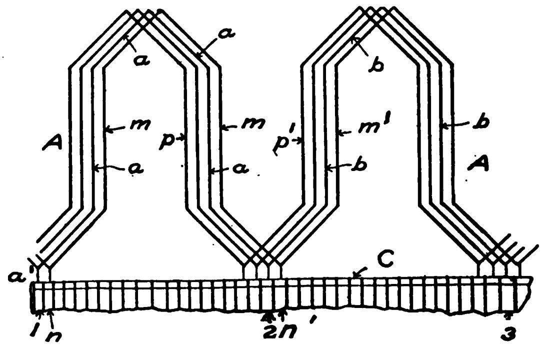


FIG. 59.

find that the distance between its ends, which are connected with commutator segments *1* and *2*, is nearly twice as great as the distance between the sides *a a*. As we have shown in the last chapter, the distance can be exactly double, or *a a* can be less or more by two coil side spaces, than one-half the distance between segments *1* and *2*.

In either case, the left-hand side of the *b* coil will connect with the right-hand side of the *a* coil, and also with segment *2*. The right-hand side of the *b* coil will connect with the left-hand side of the *c* coil, and also with commutator segment *3*. Connection will be carried in this way all around the armature, and when the starting point is reached, the next connection will be with coil *m* or with the one back of *a*. If it is with *m*, then the

junction will be connected with commutator segment *n*, and the right-hand end of *m* will be connected with the left-hand end of *m′* and with segment *n′*.

When all the coils filling the space between *m* and *p* have been connected, the armature will be one-half wound and, as can be seen from the diagram, only one-half the commutator segments will be connected. The whole armature will not be connected until the segment back of *2* is connected, and this will be the case only when coil back of *a* is reached. If the coils lie flat upon the armature surface, the ends as well as the straight parts, it can be seen that the left-hand sides and the right-hand sides cannot be in the same plane, but that the former must be under the latter. In actual armatures, the coils are located in grooves, and if the right side of one coil fills the lower half, the left side of another coil will fill the upper half of the groove. In the diagram, if we assume that the right-hand sides are on the outer layer, then there will be a side under *p*, and this will be the left side of a coil, the right side of which will be on top of *p′*, if the front and back pitches are equal; and will be one space ahead of *p′*, if the back pitch is the longer, and one space back of it, if the front pitch is the longer.

When the coils are connected into a lap winding, the appearance is as in Fig. 60. In this diagram it will be noticed that the successive coils, which are marked *a b c*, are next to each other, and that the end coming from the right side of *a* is connected with commutator segment *3*. The end coming from the right side of *b* is connected with the end from the left side of *c*, and with segment *4*. The exact arrangement of the coils can be seen more clearly in Fig. 61, which shows only three coils in place.

It will be noticed that in this connection the adjoining coils are connected, and their ends are carried to the nearest commutator segments; while in Fig. 59 the connected coils are separated from one another by a distance equal to about the pitch of the coil, and the commutator segments to which the ends are connected are separated by a distance equal to about double the pitch. As will be observed, this is in strict agreement with the explanation of the lap and wave windings given in the last chapter.

In Fig. 60, as in Fig. 59, when all the coils within the space

between the sides of coil *a* are connected, the armature will be only one-half finished, for, as can be seen in the diagram, the space covered by the coils is twice as great as that covered by the commutator segments, and all the numbers above 14 are disconnected. As in Fig. 59, it can also be seen that the two sides of the coils cannot lie in the same plane. Now, if the left-hand sides are located in the lower layer, the right-hand sides will be in the upper layer; therefore, the coil that is connected with the segment marked *12*, and the coil ahead of this which is con-

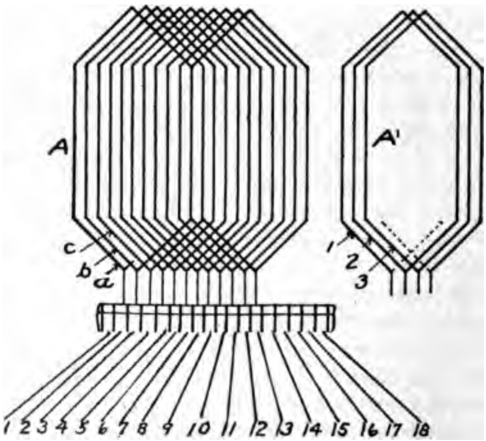


FIG. 60. FIG. 61.

nected with segment *13*, will have their left-hand sides under the right-hand sides of coils *b* and *c*.

If a generator is small, or if large, and designed to develop a very high e. m. f., the coils must be made of several turns, in some instances as many as twenty-five or thirty. In such cases small wire is used, and the coils are made upon forms so as to be given the proper shape. The general method pursued in forming such coils can be understood from Figs. 62 to 65. The first step in the construction is to wind the wire in the shape of a long loop as in the Fig. 62. If the coils are intended for a wave

winding, the ends of the wire are brought out, as shown at *a* and *b*, in loop *A*; and if for a lap winding, as at *a* and *b*, in loop *B*. The small figure *S* shows a section through the center of the loops.

If the coils are to be of the type shown in Figs. 57 and 58, the loop is simply held edgewise, in a suitable clamp, and bent into the form shown in Fig. 63. If the *A* coil for a wave wind-
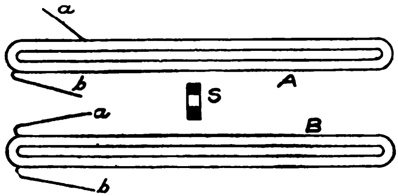

FIG. 62.

ing is used, the ends *a* and *b* will come out, as shown by *b*, in full line, and *c* in dotted line; that is, *c* will come out of the corner while *b* will come out at the end. If the coil is for a lap winding, the two ends of the wire will come out at the end of the coil, as shown by the full lines *a* and *b*.

If the coils are to be placed upon an armature that is not provided with end supports, the coil ends will have to bend

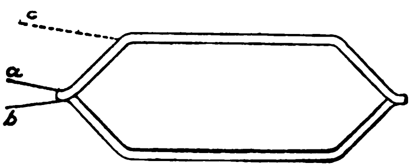


FIG. 63.

down toward the shaft, and in that case the loop *A* or *B*, of Fig. 62, is first bent into the form shown in Fig. 64. Now, when this type of coil is used, there need not be two layers upon the armature surface, for, as can be readily seen, the upper side of the loop in Fig. 64 can be depressed so as to be on a line with the other side, and still the coils will fit over each other when placed upon the armature, owing to the fact that the ends, which are the

parts that cross each other, are not in line, but those coming from the under side are within those from the upper side.

After the loop has been given the form of Fig. 64, it is caught in suitable clamps and its sides are spread out, fan fashion, so as to give it the shape shown in Fig. 65, when seen from the end

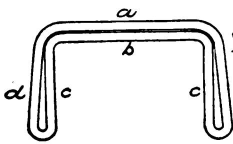


FIG. 64.

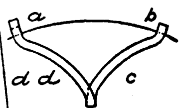


FIG. 65.

of the armature shaft. If the coils are to be only one layer deep on the outer surface of the armature, both sides of the curved ends will be of the same length, but if there are to be two layers, then one of the sides will be longer, so that *a* will stand high enough to pass over *b*. Whether the coils are made so as to occupy a single or double layer upon the cylindrical surface of the armature, they must form two layers on the ends; that is,

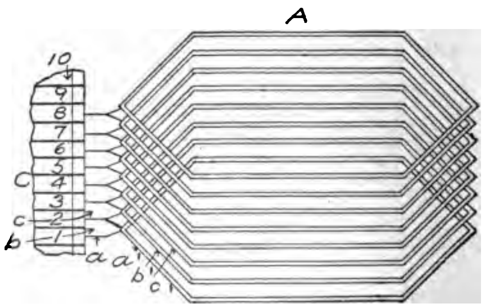


FIG. 66.

the part *c*, in Fig. 65, must be located in a layer under that filled by the part *d*, as is shown in Fig. 64.

*In connecting* the ends of coils made of several turns, with *the commutator* segments and with each other, the same order is *observed* as in the case of single turn coils. Figs. 66 and 67 are

diagramatic representations of lap and wave windings, respectively, with such coils. If we ignore the coil, as a whole, and consider only the ends of the wire, we find that Fig. 66 is the same as Fig. 57, and that Fig. 67 is the counterpart of Fig. 58. From the way the coils are drawn in Fig. 66 it can be seen that the sides at the top of the diagram are located in the under layer, while the lower sides form the top layer. Looking at Fig. 66 from the commutator end, it can be seen that the left-hand end of the coil *a* is connected with the right-hand end of coil *b*, and the two are joined to commutator segment *2*. The left-hand end of coil *b* is connected with the right-hand end of coil *c* and with segment *3*, and the connections continue in this order all the way around the armature.

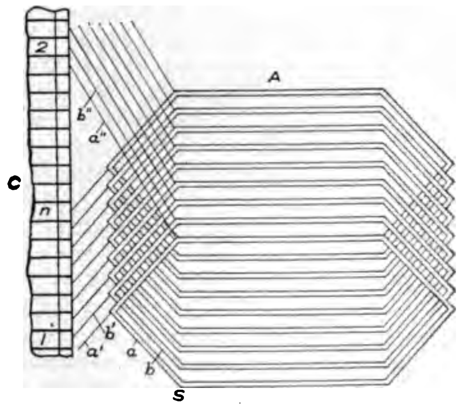


FIG. 67.

In Fig. 67, the coil sides, shown at the bottom of the diagram, form the under layer. Starting with coil *a* it will be seen that its end *a'*, which is the *b* end in Fig. 63, runs down to a commutator segment below *1* and that the *a''* end, which is the *c* end in Fig. 63, runs up to a segment one below segment *2*. The *b* coil connects in the same order, its lower end *b'* running to segment *1*, and its upper end *b''* to segment *2*.

*So far it will be seen* that the connections are the same as *in Fig. 59; that is, if* we regard the ends of the coils only

There is one difference, however, which is rendered necessary by the fact that the coil has more than one turn, and that is, that the ends, *a′ b′*, etc., do not run down from the lower corner *S* of the coils, as in Fig. 59, but first run up to the center of the end and then downward. It can be seen that, if these ends were taken out at *S*, they would have to pass under the two layers of coil ends and, therefore, could not be readily got at when repairs become necessary. It is only for the sake of making the construction more perfect that the ends are taken out thus, instead of at *S*; but as the distance between the commutator segments with which the ends *a′* and *a″* connect must be the same number of sections apart, the upper wires *a″ b″*, etc., have to be bent around to a greater angle.

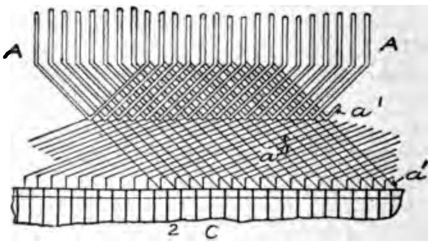


FIG. 68.

From the foregoing explanation of the manner in which coils are connected, when they consist of several turns, it will be seen that the order is the same as in the case of the simple diagrams Figs. 59 and 60, and if we disregard the body of the coil and only take notice of the ends, we can trace out the connections with one kind of coil as well as with the other.

In some cases the coils for a wave winding are made with both ends coming out, as shown in Fig. 62, *A* at *a* and *b*, and in such cases the connections appear, as in Fig. 68. The ends that run in the direction of *a′* are in some instances run diagonally, as in the diagram, and in others they are run parallel with the shaft. When they run parallel with the shaft, the *a″* ends have to be twisted around a correspondingly greater distance. In most cases of this kind, the *a″* ends are wound in a spiral form so

as to be compact and shorten up the distance between the commutator and the ends of the coils.

Sometimes the commutator is made with the $a''$ ends attached to it all in their proper place, so that the coil ends can be carried out straight, one being connected with a commutator segment and the other with an $a''$ end just back of this segment and a trifle to one side. When a commutator is so made, it is said to be cross connected. This construction is seldom employed at the present time. At present what concerns us most is to present the purely practical side of the subject in as brief a manner as possible, and at the same time not to pass by any details that are essential to a full understanding of it.

Although the external appearance of an armature is such that one not experienced in the subject would not be able to see any difference between a lap and a wave winding, a difference does exist, and a knowledge of this difference is of value, as we can then tell what the type of connection is in an armature that requires repairs, and knowing this much, we can more readily find the cause of trouble, and provide the proper remedy. Looking at Figs. 59 and 60, it will be seen that, in the first, the ends of either side of a coil do not run in the same direction; thus, taking coil *a*, its right-hand side turns to the left at the upper end and to the right at the lower end. In Fig. 60, both ends of the same side of the coils turn in the same direction; thus, the right side of coil *b* turns to the left at the top and also at the bottom.

From this it can be seen that, if we have an armature that is wound with single turn coils, we can at once determine whether the connections are of the lap or the wave type. This fact can be made clear by means of Figs. 69 and 70, which are photographic reproductions of actual armatures of large generators in which each coil consists of but a single turn. Fig. 69 is a wave winding in process of construction, and as is clearly shown, the ends running to the commutator bend in the opposite direction from those at the back of the armature.

Fig. 70 is a lap wound armature in the finished state, and the coil ends bend down at both sides. From this we find that, *if we have an armature so large that each coil consists of but one turn, all* we have to do is to look at the coil ends,

and if these turn in the same direction at both ends, as in Fig. 70, the connection is of the lap type, but if they turn in opposite directions, as in Fig. 69, the connection is of the wave type. If the armature is small and the coils consist of more than one turn, it is not so easy to determine the nature of the connection, as the coils will then have the same form for

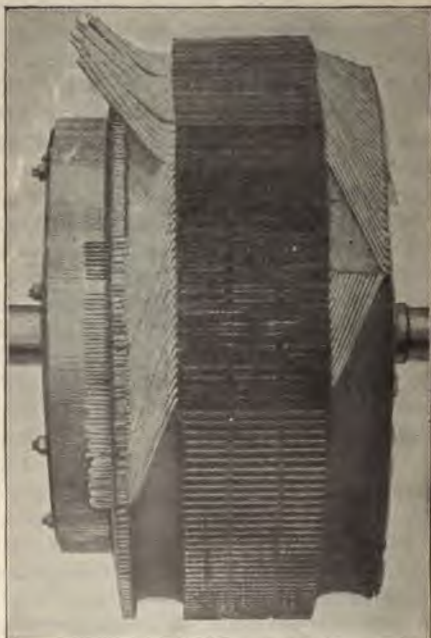

FIG. 69.

both types of winding; but if we examine it more closely and discover the direction in which the wires run from the coils to the commutator segments, we can then determine the character of the connection at once; for, if it is a lap winding, the *connections* with the commutator segments will be found to *run to two adjoining* coils, as is clearly shown in Fig. 66, while

e connection is of the wave type, the wires from the com-
tor segments will spread out and run to coils separated

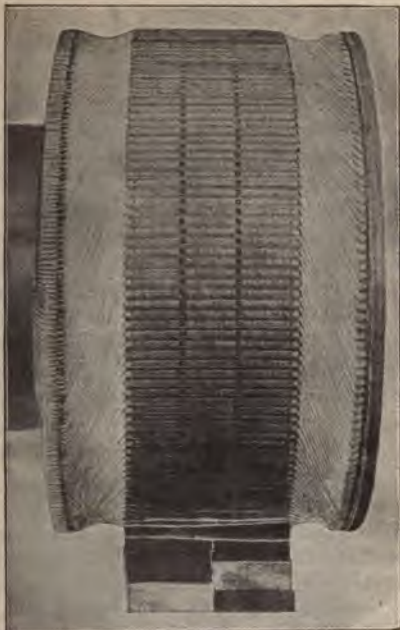

FIG. 70.

each other by a considerable distance, as shown at segment
Fig. 67.

## CHAPTER XIV.

### Connection of Generators with the Distributing Circuit.

WHEN a generator is installed, it is necessary that all the parts be in proper adjustment, electrically as well as mechanically; otherwise its operation will not be satisfactory. If the machine is new and made by a reputable concern, there is little to say in the way of directions for setting up, for all that has to be done is to assemble the parts in their respective positions and make sure that all the bolts, keys, etc., are driven far enough to bring everything to a proper bearing.

If the machine is accurately constructed, all the parts will fit properly, and the manner in which the electrical connections between the ends of the field coils should be made will become evident from the position of the couplings, binding posts, or other parts between which the connections are made. If the machine is second-hand and more or less patched up, some difficulty may be experienced in finding out how the connections go; but we do not propose to consider anything but new machines, properly constructed.

If we have a two-pole shunt-wound generator, the connections with the circuit will be as Fig. 71. In this diagram, *A* represents the armature, seen from the commutator end of the shaft. *C* is the commutator, and the brushes are marked *a* and *b*. The field magnetizing coils are marked *m m*. In order that the voltage of the generator may be varied without changing the speed, it is necessary to provide means whereby the strength of the current passing through the field coils *m m* may be increased or reduced.

This means consists of the device marked *R*, and is called a "field regulating rheostat," or simply a "field regulator." It is generally made in the shape of a box filled with coils of wire, or other form of resistance through which the current has to pass. If the lever shown in the vertical position is moved so as to cut out all the resistance of the regulator, the current passing through the field coils *m m* will be the strongest possible, and the voltage of the generator the highest, for the speed at

which it is running; and to obtain a higher pressure, the speed would have to be increased.

If the regulator lever is set so as to cut into the field coil circuit all the resistance contained in the box, the strength of the current passing through the field coils *m m* will be the smallest possible, and as a result the voltage will be the lowest obtainable without reducing the speed. By shifting the lever

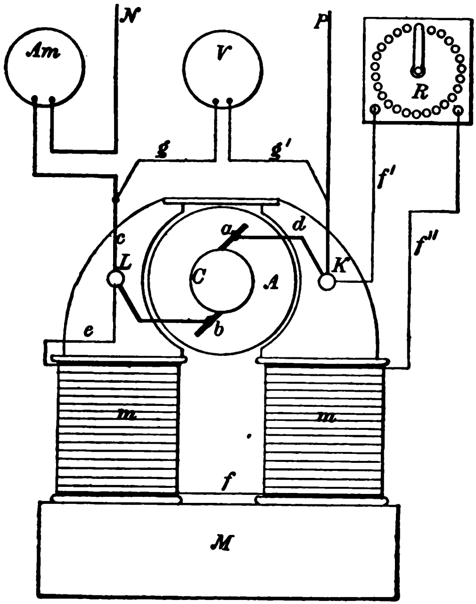


FIG. 71.

*R*, so as to cut in more or less of the regulator resistance, the voltage can be varied within the range of about 15 per cent. If this variation is not enough, the speed of the machine must be changed. The speed used should be that for which the machine is designed, and with this velocity, the required voltage can be *obtained by setting* the regulator lever in the proper position.

*If the generator* is run below speed, the current through

the field coils will have to be increased, and the wire will be heated to a higher temperature than it should be. If the speed is above the normal, the current through the field coils *m m* will have to be reduced, so as to weaken the magnetism, and this causes the brushes to spark. As shown in Fig. 71, a wire runs from brush *a* to *K*, and from here, through wire *f'*, the current passes to and through the field regulator *R*, and thence, by wire *f''*, to the top of the coil *m*, on the right side. From the bottom of this coil the current passes to the other *m* coil by means of wire *f*, and from the top of this second coil it returns to the commutator brush *b* through wire *e*.

From *K* the main current passes directly out to the positive line *P*, and thus to the distributing circuit. From *L* the main current passes through the wire *c* to and through an instrument called an ammeter, and marked *Am*, which measures the current strength in units called amperes, hence the name of the instrument. From the ammeter the main current passes to the negative line wire *N*.

From the foregoing, it will be seen that the current that passes through the field coils *m m* does not go to line, but circulates through the field coils and armature only. In large generators, this current is from 1 to 2 per cent of the total current generated. It represents the power required to magnetize the field, hence, it is a dead loss, but even in small generators it is not over 4 per cent.

In Fig. 71 the circle marked *V* is an instrument used to indicate the voltage or electromotive force of the generator, and is called a voltmeter. This instrument is connected with both sides of the circuit by the wires *g g'*; therefore, a current passes through it from wire *P* to wire *N*. This current, however, is but a small fraction of the total current, so small as to amount to practically nothing. If the voltage developed by the armature *A* is low, the current that will be forced through the wires *g g'* and the voltmeter *V* will be small, but if the armature develops a high voltage, the current forced through the voltmeter will be stronger. Thus it will be seen that changes in the *voltage developed* by the armature result in changes in the *strength of the* current that passes through the voltmeter.

*Voltmeters* and ammeters act upon the same principle; that

by the change in the strength of the current that passes rough them. The whole of the current that goes out to the e passes through the ammeter; hence, its indications will be ectly proportional to the strength of this current. The ength of the current that passes through the voltmeter *V* proportional to the voltage developed by the armature—that is,

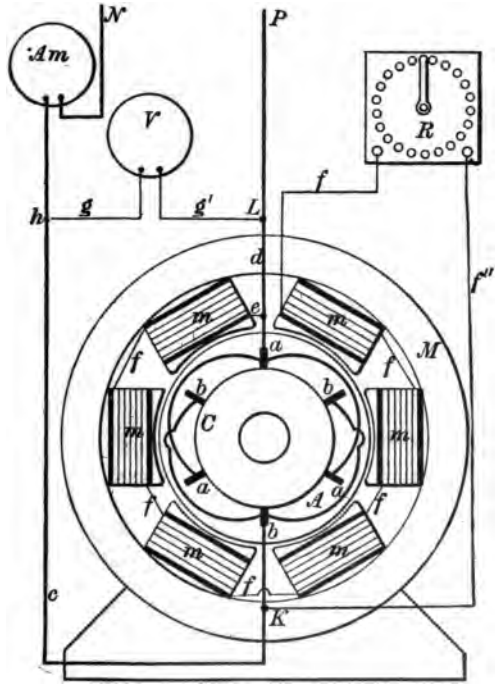


FIG. 72.

the difference in pressure between the points *K* and *L*. On s account, the indications of the voltmeter are proportional the voltage developed by the armature.

Fig. 71 shows a two-pole generator, but the connections h the line wires are the same whether the machine is bipolar

or multipolar. Fig. 72 represents a six-pole generator, and as will be seen, the connections with the line wires *P* and *N* are the same as in Fig. 71. The three *a* brushes are connected with each other, and so are the three *b* brushes. The current from the first set passes out to point *L* and that from the second to point *K*. From this latter point the field current is derived, and passes through the wife *f''* to the field regulator *R*, and then by wire *f* to the field coils, and after traversing all these, one after another, it comes out by wire *e*, to wire *d* and thus back to the armature through the *a* brushes. From wire *d* the main current passes to the positive line wire *P*, and from point *K* it passes to wire *c*, thence through the ammeter to line wire *N*. The current through the voltmeter *V* is derived from wires *d* and *c* through wires *g g'*, which tap the line wires at *h* and *L*. The action of the field regulator in the figure is the same as in the two-pole machine.

If a generator is shunt wound, there is not much difficulty in determining the proper connection of the coil ends, for in the case of a two-pole machine, if the two coils are not connected in the proper order, the armature will not deliver a current, and in the case of a multipolar generator, although a current may be developed when the coils are not all properly connected, the fact that they are misconnected will be shown by the facts that the voltage will be too low and the brushes will spark.

If the manner in which the coil ends should be connected is not clearly indicated by their position, we can determine whether the connections are properly made by noticing the direction in which the current flows around the magnets. The proper direction is fully explained in preceding chapters. If the field coils are covered so that the direction in which the wire is wound cannot be determined, then the proper connection can be obtained by testing the field poles with a magnet needle and observing that alternate poles must be of the same polarity.

In Figs. 71 and 72, we have shown the field regulator connected between the end of the field coils and one of the wires leading out to the main line. As the different types of connecting may lead to some confusion, if not properly understood, we will explain them here by means of diagrams.

Fig. 73 represents a simple shunt wound generator of the wo-pole type with the field regulator connected between the eld coils. The current from brush *a* passes to point *K*, and ience to the line wire *P*, and the current from brush *b* passes › point *L* and thence through the ammeter to line wire *N*. 'hrough the wires *d* and *e* the field exciting current passes to ıe field coils *m m*. The current passes first through one of the ›ils, then through the field regulator and then through the other ›il. The effect of this arrangement is that both the brushes ›nnect with the points *K* and *L*, and are therefore symmetrical,

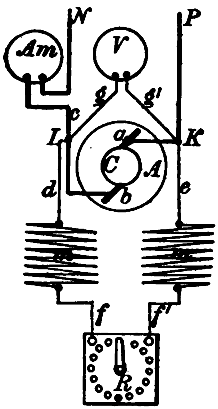


FIG. 73.

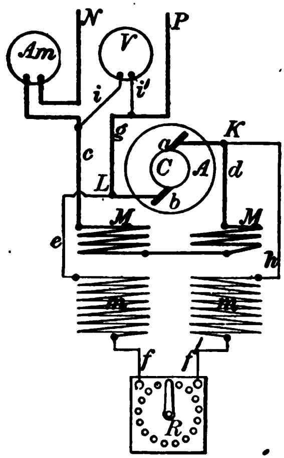


FIG. 74.

ıd at the same time the wires *d* and *e* lead to ends of the field ›ils and are also symmetrical, but, if they are connected as in ıe previous figures, one will lead to the end of a field coil and ıe other will run to the field regulator.

Fig. 74 shows a compound wound generator diagram, in 'hich the connection of the main coils is not symmetrical. In ıis diagram, as in Fig. 73, *A* represents the armature, *C* the ommutator, and *M M* and *m m* the field coils. The current rom *brush a passes to point K*, and thence through the two *ain field coils M M,* which are called the series coils, and then

through the ammeter to the main line wire *N*. The current from the *b* brush passes to point *L* and thence to line wire *P*. As in Fig. 73, the current for the shunt field coils *m m* is derived from the points *K* and *L*, and the field regulator is interposed between the shunt coils.

It can be clearly seen that, if a machine is wound as in Fig. 74, the connections will not appear symmetrical, for the wire *P* will be seen to connect with the brush *b;* while wire *c* will con-

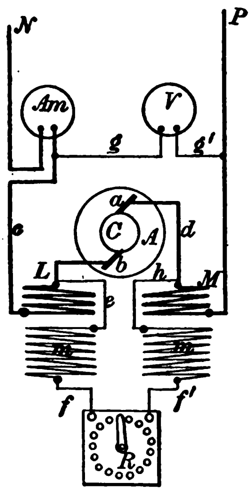


FIG. 75.

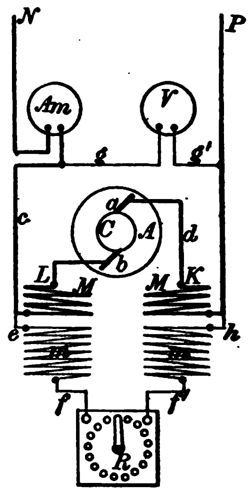


FIG. 76.

nect with the end of one of the field coils The connection of the series coils can be made symmetrical by following the arrangement illustrated in Fig. 75. The difference between this connection and that of Fig. 74 is that the armature in Fig. 75 is placed between the two *M M* coils, hence, the wires leading out from the machine connect with the other ends of these *M M* coils. The connection Fig. 75 is what is called a short shunt winding, the name being given because the field coils *m m* shunt only the armature. That this is the case will be seen by noticing that the wires *c* and *h* connect with the wires leading from

the two brushes. The type of connection shown in Fig. 76 is called the long shunt, and derives its name from the fact that the field coils, *m m*, shunt the series coils as well as the armature.

In this latter figure it will be seen that the wires *c* and *h* connect with the terminals of the field coils *M M*, thus shunting the whole machine.

This type of winding was used extensively in the early days, before the principles of action of shunt wound generators were properly understood, but it is now practically discarded, as its

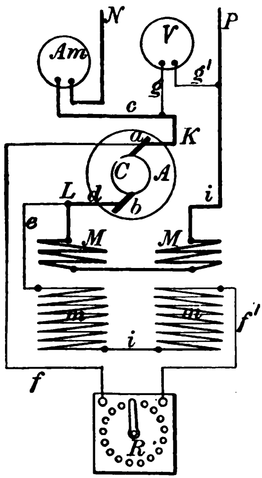


FIG. 77.

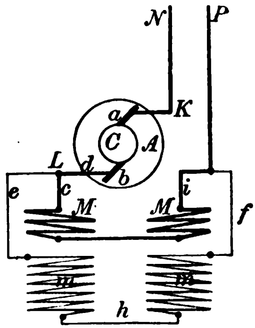


FIG. 78.

effect is to render the regulation of the generator less perfect. As can be seen from the diagrams, any machine that is connected with long shunt can be changed to short shunt by simply changing the points of attachment of the wires *c* and *h*.

Fig. 77 shows the type of connection that is used for compound wound generators when several machines are to be operated together to supply current to the same system of distributing wires. The series, as well as the shunt, field coils are connected unsymmetrically, but the shunt coils may, if desired,

be made symmetrical; that is, the regulator may be placed between the two *m m* coils instead of at the end. The reason why the series coils, *M M,* are connected on one side of the armature instead of as in Figs. 75 and 76, when the generators are to be operated together, will become evident when we explain the manner in which two or more machines are connected.

In connecting the ends of the shunt coils *m m,* it is necessary to be careful and arrange them so that they do shunt the armature. A mistake that can be easily made can be seen from looking at Fig. 78, where it will be noticed that the wire *e* leads from point *L* and wire *f* connects with line wire *P,* instead of with point *K.* With this connection, the current passing through the *m m* coils would be practically nothing, and the machine would act as if provided with the *M M* coils only. In Fig. 78 the instruments and field regulator have been omitted so as to show more clearly the coil connections.

# CHAPTER XV.

## Connection of Generators with the Distributing Circuit. *(Continued.)*

WITH the last chapter are diagrams which show how the terminal wires of two-pole generators are connected with the line wires, and with the ammeter, voltmeter and field regulator. In Figs. 79 and 80, herewith presented, are illustrated the connections for multipolar machines. Both these diagrams represent compound wound generators, Fig. 79 being the type of connection commonly employed with machines of small and medium capacity, while Fig. 80 shows the modifications employed with larger generators.

So far as the connections external to the machine are concerned, they are the same, whatever the size may be, but the series field coils are generally connected in series with each other in small generators, and in parallel in large machines. This difference is due to the fact that when the machine reaches a certain size, the cross section of the wire required to carry the main current becomes so large that it is difficult to wind it in coils, and on that account the main current is split up and only a portion of it passes through each series coil.

In Fig. 79, it will be seen that the current from the *a* brushes passes to the series field coils from point *L*, and after traversing the whole set, goes to wire *c*, and through the ammeter to line wire *N*. The current for the shunt field coils *m m m* starts from *L*, through wire *e*, and through wires *f′ f′*, to and from the field regulator *R*. From the end of the shunt coils the path is through wire *h* to wire *d*, and brushes *b* and back to the armature. As in the case of the two-pole generator diagrams, the voltmeter is connected across the main line wires *P* and *N*, by means of the wires *g g′* while the ammeter is directly in the main circuit.

With the connections shown in Fig. 79, the whole current delivered by the armature passes through each one of the six M field coils. In Fig. 80, the current from the *a* brushes passes to a ring *R*, which it taps at the point *i*. The six M coils are con-

nected with this ring; therefore, the current splits up into six equal parts, and each part passes through one of the *M* coils and reaches the outer ring *R'*. From this outer ring the current passes by wire *c*, which leads from point *L*, to the ammeter and thus to the line wire *N*. From the *b* brushes, the connection is direct with the line wire *P*.

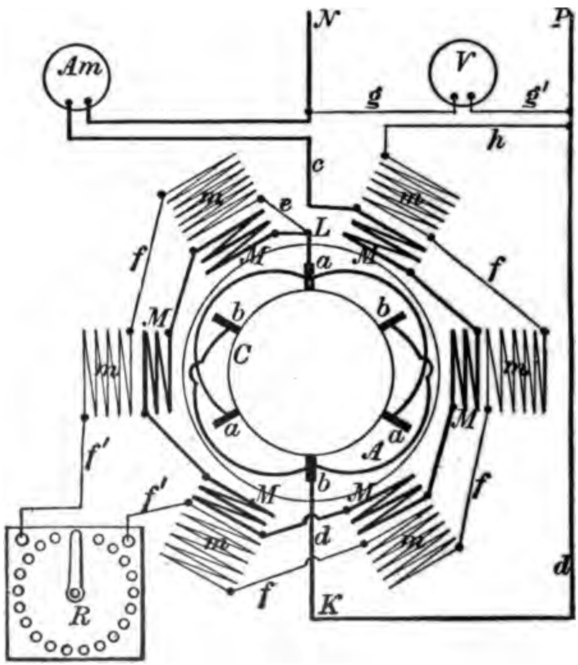


FIG. 79.

Shunt field coils *m m* derive their current from point *L* through wire *c*, as in Fig. 79, the wire *h* completing the circuit with wire *d* back to the armature. As will be noticed, the only *difference between* Figs. 79 and 80 is, that in the first, all the *armature current* passes through each M coil, while in the second *only one-sixth* of the current traverses each M coil. By resort-

ing to this expedient, the cross section of the wire of which the *M* coils are formed, can be reduced to one-sixth of what it would be with the full current traversing each one. To compensate for the reduction of the current to one-sixth of the strength, the number of turns of wire has to be increased six

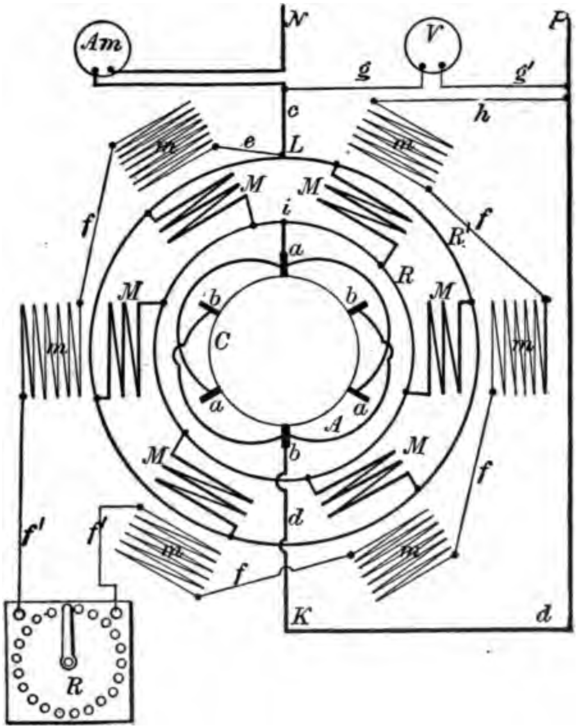


FIG. 80.

times; hence, with the type of connection of Fig. 79, each *M* coil would have one-sixth the number of turns that would be used with the connection of Fig. 80, but the wire would be of six times the cross section.

When two or more generators are connected so as to feed into the same system of distributing wires, it is necessary to resort to certain expedients in order to prevent the load from being unequally distributed; that is, so as not to have one machine do more than its share of the work while another is doing little or nothing. If the generators are of the simple shunt wound type, all we can do is to adjust the field regulators so that all the generators develop the same voltage as nearly as possible. Absolute equality of voltage cannot be obtained, for if the generators are regulated so as to develop the same pressure with a given strength of current, they will not give equal

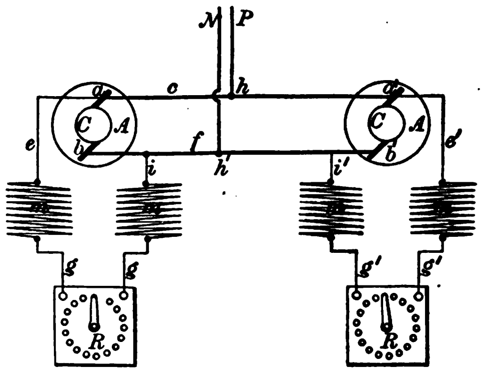


FIG. 81.

pressures with all strengths of currents, for the simple reason that it is not possible to make machines so perfect that they will run alike at all possible loads. If the generators are accurately constructed, however, the difference between their actions at different loads will not be great, so that, if they are properly adjusted for any given current, they will run nearly in adjustment for any other current.

Fig. 81 shows the way in which two shunt wound generators are connected to feed into the same distributing circuit. As will be seen, the two *a* brushes are connected with each other by means of the wire *c*, and the two b brushes are connected by means of wire *f*. The line wires N and P are taken from the

points *h h'*. The currents for the shunt field coils, *m m*, are derived from the main current, in the same way as in the case of generators operating singly.

Generators connected to operate in this way are said to be connected in parallel. The action is as follows: The armature of the generator on the right develops a current that flows through the wire *c* from brush *a'* toward point *h*. The armature of the generator on the left develops a current that flows from brush *a* through wire *c* toward point *h*. If the voltage of both currents is the same, they will just balance each other, and if there is no outlet from point *h*—that is, if there is no closed circuit between *h* and *h'* through the line wires *P* and *N*—then neither generator will develop a current, for each machine will act against the other, and both being of equal voltage, they will be balanced and no current will flow.

If, however, the point *h* is connected, through the external circuit, with point *h'*, then the combined currents of the two generators will pass out at point *h* to line wire *P*, and thus through the external circuit to point *h'*. At this latter point, the current will split and one-half will flow to each generator. If the voltage of one generator is slightly lower than that of the other, the current it will send into line wire *P* will be less than the proper amount, and if the voltage is slightly higher, the current will be greater than it should be. From this it will be seen that, if we desire to have both generators do their proper share of the work, we must adjust their voltages accurately.

This adjustment we can obtain for any particular current strength, but not for all. To illustrate, suppose the machines are of such size that they can develop a current of 200 amperes each, making a total of 400 amperes, that would pass from point *h* into line wire *P*. Let the machines be adjusted so that each delivers the same current when the demand from the external circuit is 300 amperes, then each generator will deliver 150 amperes. If now, the line current is reduced to 200 amperes, each generator may, or it may not, deliver 100 amperes; one machine may give 105 and the other only 95, due to the fact that we cannot construct machines so perfect that their action will be exactly *the same for all strengths* of current. If they are properly bal*anced for a given current*, one may run below the proper amount

when e current strength is reduced and may run above the proper amount when the current increases, or it may run above for a certain amount of reduction in current strength and then begin to lose and gradually run below its proper amount.

If compound wound generators are used, the work can be made to divide more equally among them, as the series coils *M M* of the several machines can be so connected that the current flowing through them will tend to correct the inequality of action. From the general appearance of the shunt machine

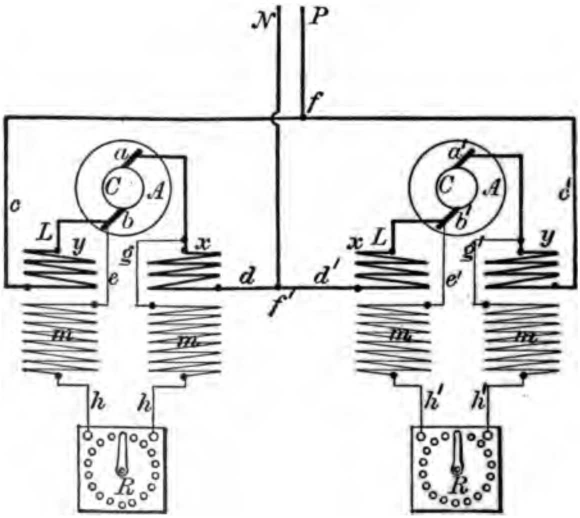


FIG. 82.

connections shown in Fig. 81, it would naturally be inferred that compound wound generators should be connected in parallel in the manner shown in Fig. 82, but such an arrangement would lead to unsatisfactory results. We will endeavor to show why.

*Let us first* consider the simple shunt wound machines. In *these the field* magnetism is developed wholly by the current *that passes* through the shunt coils *m m* and the strength of this *current is* proportional to the voltage developed by the armature.

Now suppose that the two generators in Fig. 81 are adjusted for 150 amperes each, and that when the current reduces to 200 amperes, the generator on the right-hand side develops, say, 105 amperes.

Reflection will show that this increase in current of 5 amperes over the proper amount is due to the fact that the machine at this point develops a greater voltage than it should. This increase in voltage causes an increase in the strength of the current flowing through the field coils *m m,* and this increased current in turn causes a further increase in the voltage of the armature. Thus, it will be seen that a slight difference in the action of the two machines can result in a decided difference in the amount of current they deliver, for the machine that does too much has the defect increased by the fact that the current through the field coils is increased, while the other machine is affected oppositely from the fact that the current through the field coils is reduced.

Now let us investigate the action in the compound wound machines. The voltage of the armature is developed, not only by the strength of the field magnetism produced by the shunt coils *m m,* but also by the magnetism produced by the series coils *M M*; that is, the field magnetism of the compound wound machine is developed by the combined action of the *m m,* and the *M M* coils. Remembering this fact, we can see, at once, that if one machine falls behind, the reduction in current will not only be felt in the *m m* coils, but also in the *M M* coils; hence, the net difference in the strength of the currents delivered by the generator will be greater in the compound wound generator, for a certain amount of inequality in the machines, than it would be, if they were shunt wound.

Reflecting upon the subject, we can see that, if we can so connect the machines that the current passing through the *M M* coils will be the same in both machines, then the only effect the difference in the voltage of the two can have, will be to cause the shunt coil current to be more or less than it should be, and as the field magnetism is produced by the combined action of the shunt coils *m m* and the series coils M M, the *actual difference in the* voltages of the armatures will be less *than it would be with the* simple shunt winding; for now only

the current passing through one of the sets of magnetizing coils is affected.

By resorting to the type of connection shown in Fig. 83, the current passing through the series coils *M M* can be maintained equal, if we have only two machines connected, and if we have more than two, each one will always receive its proper share. In this figure the top brushes *a* and *a′* of the two machines are connected with point *k* by wires *d* and *d′*, and in the same way the lower brushes *b* and *b′* are connected with point *f* by wires *e* and *e′*. The terminals of the series coils are connected with

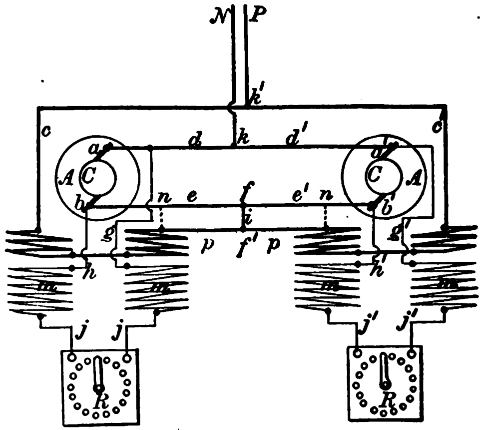

FIG. 83.

line wire *P* by means of wires *c c′*. From *f*, the current passes to *f′* through wire *i*.

Now at *f′* the current will divide, part passing to the series coils of the generator to the right, and part to those of the generator on the left. The proportions in which the current will divide depends entirely upon the relative resistance of the series field coils of the two machines, and if these are equal, the two currents will be equal. Thus it will be seen that the manner in which the current divides at *f′* is entirely independent of the amount that is generated by each armature. If the current passing out of brush *b′* went directly to the field coils of its own

machine, and the same were the case with the current from the *b* brush, then the strength of the currents through the respective field series coils would be the same as that through the armatures; but by mixing up the two currents, so to speak, and running them to point *f′* through wire *i*, they are compelled to divide in equal amounts through the two sets of field coils without any regard to their amounts before reaching point *f*.

In this diagram, we have shown a single connecting wire *i* between *f* and *f′*, but so long as *e* and *e′* are connected it matters little whether we provide one or two wires *i*. We could run wires from the points *n n*, directly to the respective field coils as indicated in dotted lines, and obtain the same result as by using the single wire *i*. If we used the wires running from points *n n*, we should not require the wires *p p′*.

Wire *e e′* is called an equalizing wire, from the fact that its office is to equalize the currents flowing through the series coils of the two machines.

From an examination of Fig. 83, it will be seen that, in order to equalize the current through both of the series coils, we are compelled to connect the two together, and on the same side of the armature. If we used the symmetrical connection of Fig. 82 it would be necessary to provide two equalizing wires, as the armature would then be between the coils. Thus in Fig. 82, to equalize the currents through the series coils we should have to connect the two *a* brushes and also the two *b* brushes; then the connection of the latter pair would allow the current through the two *x′ x* coils to be equalized, while the connection between the *a a* brushes would equalize the current in the *y y* coils. From this explanation can be understood why the unsymmetrical connection of the series coils is resorted to when generators are made to operate in parallel.

When more than two generators are connected in parallel, the equalizing wire connects the *b* brushes of all the generators; therefore, the currents flowing through the series coils of all the machines will be proportional to the resistances of the coils, and if these resistances are equal, the currents will be equal.

If in Fig. 81, p. 116, the *b* brush of the generator on the left were connected with the *a′* brush of the generator on the right, the line wire *P* would be connected with the *a* brush of the left side

machine, and the $N$ line wire would connect with the $b'$ brush of the right side generator.

With this arrangement of the wires, the generators would be connected in series, and the current generated by the first machine would pass through the second. The effect of its passing through the second machine would be to increase not its strength, but only its voltage. Generators are never connected in series except for arc lighting, and then only when the circuits are extremely long, and the machines of too small capacity to furnish the necessary voltage for all the lamps in the circuit.

In the diagrams so far shown, we have represented the generators as connected with an ammeter to measure the strength of the current, a voltmeter to indicate the voltage, and a field regulator to enable us to adjust the voltage to the required amount. In actual practice, it is necessary to provide other devices, such as circuit breakers, switches, wattmeters, lightning arresters, etc., which are treated under the construction of switchboards.

# CHAPTER XVI.

## CONNECTION OF SWITCHBOARDS.

IF CONNECTED with the distributing circuit in the manner illustrated in the diagrams of the two previous chapters, a generator would operate successfully, but to facilitate the manipulation of the apparatus, it would be necessary to provide a switch by means of which the current could be stopped without stopping the machine. In the case of two or more generators connected in parallel on the same circuit, switches for each machine would be an absolute necessity, as it is not practicable to start a number of machines all at once. When more than one generator feeds into a distributing system, it becomes necessary in starting, to set all the machines in motion, and then connect them, one at a time, with the circuit. The reason for this, and the manner in which the machines are started, will be fully explained presently.

In addition to the switches, means should be provided whereby the current may be interrupted, if it reaches a strength that will endanger the generator. Two kinds of devices are commonly used for this purpose, one of which is called a safety fuse, and the other a circuit breaker. A safety fuse is simply a piece of wire that is too small to carry a current of sufficient strength to injure the generator or other apparatus it is designed to protect.

Safety fuses can be made of any kind of wire, but in practice they are almost invariably made of some alloy of tin, lead and bismuth, that will melt at a low temperature. These alloys have two advantages, one of which is, that they are very poor conductors of electricity, as compared with copper, and on that account can be made of much larger diameter than if of the latter metal. The other advantage is that, as they melt at low temperatures, there is no danger of setting inflammable objects on fire, if the molten particles fall upon them, when the fuse melts.

As it takes time to heat a safety fuse to the melting point. it does not act instantly. A current much stronger than a fuse can carry *continuously* can pass through it for several seconds *without melting it, and* during this time it may do serious dam-

age to the generator. On this account fuses are generally used to protect branches of the distributing system, but not as protectors of the generator proper.

For the latter purpose, the circuit breaker is used, except in cases where the installation is of the cheapest and crudest kind. A circuit breaker is simply a switch, so arranged that it will fly open when the current reaches the strength for which it is adjusted. The general principle of construction is that the switch part is held in closed position by means of a catch. A magnet is provided that is adjusted so as to disengage the catch as soon as the current reaches a dangerous strength, and then a spring, being unopposed, throws the switch to the wide open position and thus breaks the current.

In addition to switches and circuit breakers, the circuit is also provided with lightning arresters, if any of the wire is exposed so as to be liable to be struck by lightning discharges.

As a number of devices have to be used to operate a generator and distributing system conveniently, it is evident that more or less ingenuity can be displayed in the location of these so as to be in the most accessible positions, and thus to be of the greatest value. To place them, haphazard, in different parts of the room in which the generators are located, would not be a wise plan; on the contrary, the best results can be obtained by concentrating them at one point. This fact has resulted in the development of the modern switchboard which is now considered an indispensable part of any well planned electrical installation. By commencing with simple cases and working up gradually to those of a complicated character, the general construction of switchboards can be readily understood. The simplest switchboards are those used in connection with single generators, and the most complicated those which provide for a large number of generators that are arranged to feed into a number of independent distributing systems.

Fig. 84 illustrates a simple switchboard arranged for one generator to feed into one system of distribution. To simplify the diagram, we have represented the generator by a circle *marked G.* The smaller circles within this, marked *a, b, c, d, represent the* binding posts to which the wires running to the *switchboard* are attached, *a* and b being the binding posts to

which the main line wires are connected and *c* and *d* those to which the wires leading to the field regulator are connected. The field regulator is shown at *R*. The wires *e* and *f* connect the main binding posts of the generator with the main switch, which is located at *S*, and are attached to its lower terminals.

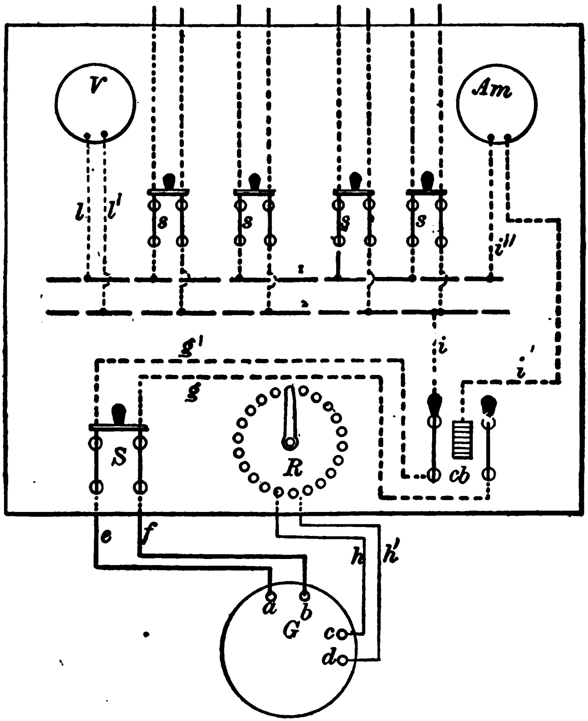


FIG. 84.

From the top terminals of this switch, two wires *g g'* are run to the lower terminals of the circuit breaker, marked *c b*. From the left side upper terminal of the circuit breaker, a wire *i* runs to the horizontal wire marked *2*, which is called a bus bar. From the other top terminal of the circuit breaker a wire *i'*

runs to the ammeter *Am*, and from this instrument the current passes to the top bus bar, marked *1*, by the wire *i''*. From this description it will be seen that the two bus bars *1* and *2* are the *P* and *N* wires shown in the diagrams of previous articles. These wires are called bus bars because they are centers of distribution from which all the external circuits are taken.

In Fig. 84 four small switches, *s s s s*, are shown, and these are all connected with buses *1* and *2*. Each one of these switches controls the current supplied to a distributing circuit. Each one of these circuits may run out for several hundred feet and furnish current for a large number of lamps or motors or both. The number of *s* switches will naturally depend upon the number of independent external circuits, hence there may be two or three small *s* switches, or there may be thirty. The only effect the number of the secondary switches will have upon the switchboard will be on its size, as it must be large enough to accommodate all the apparatus that is to be placed upon it.

Voltmeter, *V*, is shown connected to the two bus bars by the wires *l l'*, but it could be connected to the wires *e f* just as well. Sometimes lightning arresters are placed upon the switchboard, but none are shown in Fig. 84, as the best modern practice is to locate them elsewhere.

Switchboards should be placed in a vertical position, near the wall, but not so near as to interfere with the thorough inspection of the connections on the back. The distance between the wall and the back of the board should be from 3 to 4 feet. All the wires are placed on the back of the board, and the switches, circuit breaker and instruments are on the front. The field regulator is also placed on the back, and only the handle projects through to the front. In Fig. 84 the wiring is shown in broken lines to indicate that it is behind the board.

If it is desired to stop the current, the switch *S* is opened, and unless the current is not to be used for several hours, it is unnecessary to stop the generator. If we desire to stop the flow of current in any one of the distributing circuits, all we have to do is to open the *s* switch that controls that circuit. By having the field regulator located on the switchboard, the adjustment of the generator to the proper voltage is greatly facilitated, for the attendant can turn the regulator handle while watching the

oltmeter, and thus see when the proper adjustment is effected.

In some cases it is desirable to arrange the external circuits ıto two or more independent distributing systems, and to have ıe connection with the generator so arranged that any one sys-

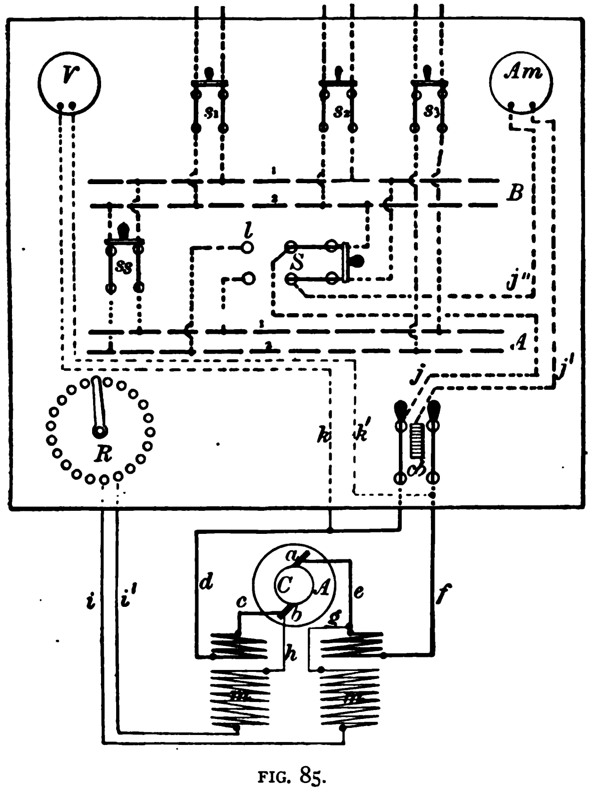


FIG. 85.

m may be operated alone or all at the same time. If the :ternal circuits are divided into two independent systems, the ·rangement of the switchboard is less complicated than when ere are three divisions; and three divisions cause less com-

plication than four, and so on, for any greater number. In Fig. 85 is illustrated the manner of making the connections when the external circuits are divided into two systems, and from this diagram, the method employed with a greater number of systems can be readily understood. For the sake of illustrating more clearly the manner in which the generator is connected with the board, we have given, in this figure, a complete diagram of the generator, coils and connections.

From the circuit breaker, *c b*, the current passes to the top center contact of the main switch *S* by wire *j*, and by wire *j'* to the ammeter *Am* and thence by wire *j''* to the lower center contact of the same switch. This main switch is of the type called double-throw; that is, it can be thrown to the right or left. When thrown to the right the current passes to the right side contacts, and from here to the *B* buses at the top of the switchboard. If the switch is thrown to the left it will connect the center contacts with those on the left side, marked *7*, and the current will pass to the lower buses, marked *A*. The small switches, *s1, s2*, are shown connected with the upper buses *B*, and switch *s3* is connected with buses *A*. The switch *s s* is provided for the purpose of connecting the two sets of buses, and when it is closed the generator will feed into the entire system, regardless of which side the main switch, *S*, may be thrown in; but when *s s* is open, the current will pass to the buses with which *S* is connected.

From the foregoing it will be seen that by this arrangement we can connect the generator with the upper or the lower buses independently or we can connect it with both by closing the *s s* switch.

When two generators are connected in parallel, the switchboard arrangement is as shown in Fig. 86. We now have three bus bars, and the lower one marked *3* connects through the main switches, *S1 S2*, with wires *d d'*, which will be recognized as the equivalent of the equalizing wire in Fig. 83—that is, wires *d d'* together with bus *3* constitute the equalizing wire. These equalizing wires do not connect with the circuit breakers *c b*, and it is not necessary that they should; for, if the connections with wires *e* and *h* are broken, the circuit through the generator will be opened.

In this arrangement, we have shown each generator connected with its own ammeter, but we have provided only one voltmeter, and this is arranged to indicate the voltage between the two buses *1* and *2*. When a single voltmeter is provided, it

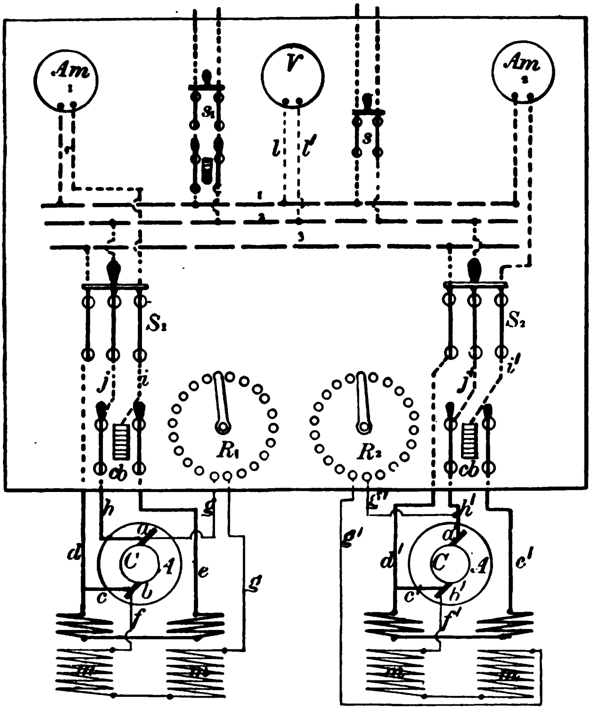


FIG. 86.

; arranged so as to be connected with each generator inde- endently so as to be used in adjusting the machines in the act f starting.

*Only two distributing* circuits are shown in this diagram, *t it will be noticed* that, in one, a circuit breaker is provided

as well as a switch. It is customary to provide circuit breakers in the distributing circuits when there are devices upon them that would be seriously injured by an excessive current.

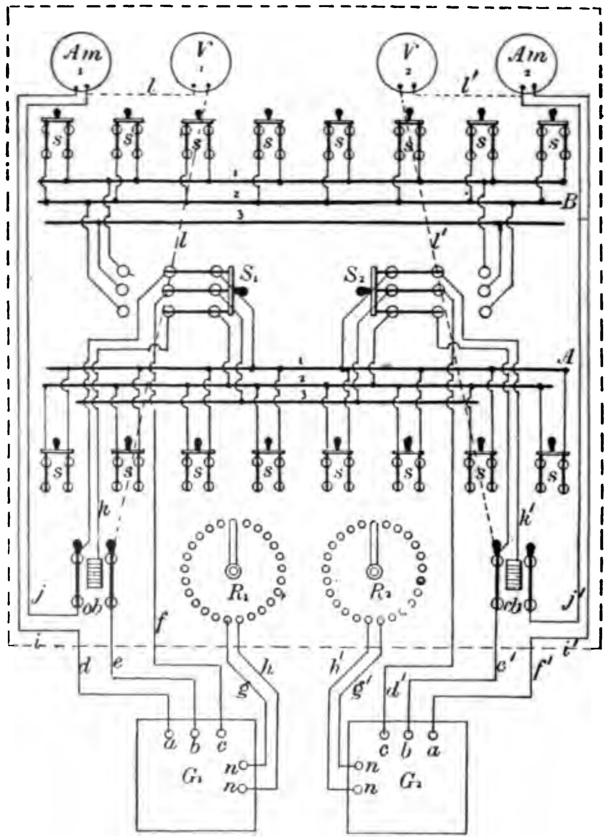


FIG. 87.

Fig. 86 shows the simplest form of switchboard for two generators, as it is arranged for only one system of distributing circuits. In Fig. 87 a more complicated arrangement is shown

which two independent distributing systems are provided for. It will be noticed that this diagram is simply an elaboration of Fig. 85 and that two double-throw main switches, *S1* and *S2*, are provided instead of one, but these are necessary on account of the two generators. In all other respects the diagrams are identical. The main switches are shown in the position that connects the generators with the lower set of buses marked *A*. If either switch is thrown to the opposite side, it will connect its generator with the top buses, *B*. Both generators can be connected with the top buses and either one can be connected with either set of buses, but the whole system cannot be tied together as in Fig. 85. To accomplish this result we should have to provide a switch to correspond with *s s* of Fig. 85; that is, a switch to connect the two sets of buses.

If each generator is connected with a separate set of buses, we can run them at different voltages, but if both feed into the same set as represented in the diagram, the voltage must be equalized. Therefore, unless the two voltmeters indicate the same pressure, the generators cannot be connected with the same set of buses.

In starting up two generators, which are to be connected in parallel, the course of procedure is to set the machines in motion, close the circuit through one and adjust its voltage by means of the field regulator to the proper point. This much being done, the circuit breaker of the second machine is closed, and the voltage developed by the armature is indicated notwithstanding that the main switch is open, for the circuit between wires *d* and *e* will be closed through the voltmeter and the wires *j* and *i* leading to the ammeter. By moving the field regulator of the second machine, its voltage is brought to the same value as that of the machine already in operation, and when the two machines are at the same voltage, the main switch of the second one is closed.

If the switch of the second generator be closed when the voltage of the first machine is higher than the second, then the latter may be overpowered, and the current be forced through it in the backward direction, if the difference in the voltages is great enough. Under such conditions, the second generator will act as a motor and possibly drive the engine at a speed high

enough to do damage. If the second machine were developing the higher voltage when they were connected, it might reverse the current through the first one, and convert it into a motor.

Unless the difference in the voltages is considerable, there is no danger of such an occurrence, for, as soon as the over-powered machine begins to lose its current, the speed of the engine will increase, and thereby increase the voltage and thus check the further decrease of current, but it is not wise to depend on such action taking place. The safest plan is to take it for granted that, if the two generators are not adjusted within, say, one or two volts of the same voltage, they must not be connected in parallel.

When only one voltmeter is provided, as in Fig. 86, it must be shifted from one machine to the other to adjust the voltages in starting up the second machine, and this takes time, and is not so reliable a method as when each generator has an independent instrument. Hence, if economy dictates reduction in the number of instruments, it is better to provide one voltmeter for each generator and only one ammeter for the two. The best arrangement of all, is to provide a differential voltmeter, to be used for the purpose of connecting the generators with the circuit. One such instrument will answer the purpose for any number of generators. When a differential voltmeter is used it is connected with the bus bars and with the generator that is to be started and the two voltages act against each other. When they are equal the actions neutralize one another, and the instrument indicates zero.

## CHAPTER XVII.

### SWITCHBOARDS—(*Continued.*)

IN Fig. 87, as well as in the diagrams presented herewith, the generators are represented by rectangular outlines, on which the circles *a b* represent the main terminals—that is, the binding posts to which the main line wires are connected—and *c* represents the equalizer terminal, while *n n* are the posts to which the wires leading to the field regulator are attached. The outline of the switchboard is shown in broken lines in these figures so as to be able to draw the wires in solid lines and thus render the diagrams simpler and clearer.

Figs. 88 and 89 represent different arrangements of four generators connected with more or less complicated external circuits. In the arrangement of a switchboard the effort should always be, to reduce the complication as much as possible, but at the same time, we cannot attain simplicity by neglecting to so arrange the various parts as to fully meet all the requirements. Now it may happen that we have a building in which for some reason it is desired to arrange the circuits so that the lights in a certain portion may be turned out at a certain hour, and that this be effected directly from the switchboard. If such is the case, the connections must enable us to accomplish the desired result.

Again, it may be required to control the lights in several parts of the building from the switchboard, and if so switches must be provided for the purpose. It may be desired that a certain portion of the lights on several floors be fed from one generator while other lights are operated by another machine; that is, each of the generators may be required to take care of a certain portion of the system. Some lights on account of being far removed from the generators may require a current furnished at a higher initial voltage, so as to compensate for the greater loss of potential in transmitting the current over the greater distance.

Many other conditions may arise that will interfere with reducing the switchboard connections to the simplest form;

therefore, it is necessary to know how to proceed when complicated cases present themselves, and the best way to reach

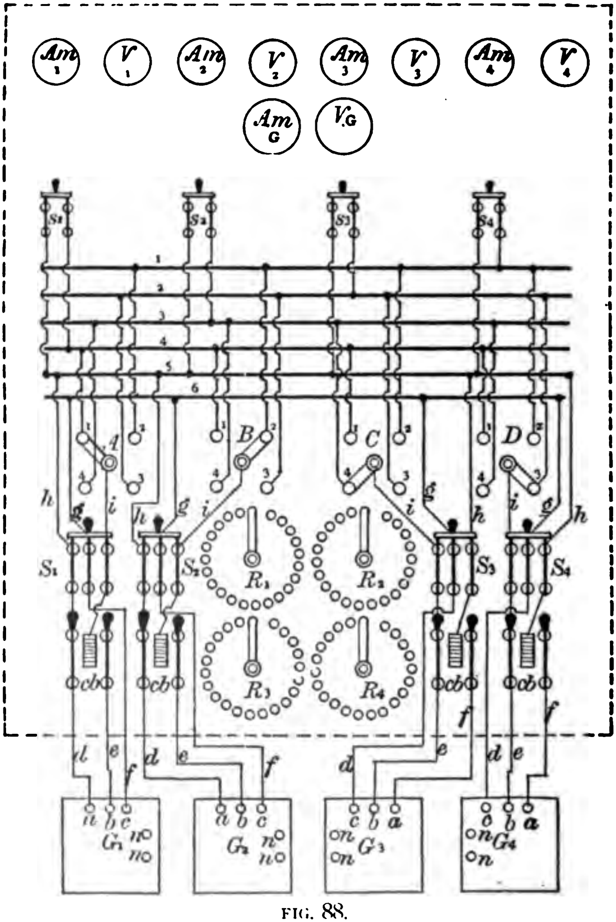


FIG. 88.

point is by the study of arrangements calculated to meet such complex requirements.

In Fig. 88, four generators are provided to feed into four external distributing systems, and are so arranged that any one of the generators can be connected with any one of the distribution systems. The way in which all this is accomplished can be made clear by the explanations that follow:

The four generators *G1, G2, G3, G4* are connected with the four switches *S1, S2, S3, S4,* respectively. The wires marked *g* leading from the center contacts of the switches connect with the bus marked *6*. But *6* is the equalizing bus, and it will be noticed that, as in diagrams previously presented, the wires that connect with it do not lead from the circuit breaker *cb*. Bus *5* may be the common junction for all the negative, or all the positive wires coming from the four generators. The remaining contact of the *S* switches is connected with *A B C D*, by means of the wires marked *i*.

These last named switches are of the type called four point; that is, they have four contacts marked *1 2 3 4* and the switch lever, which is pivoted in the center, can swing around so as to make contact with any one of the four points. Each one of the contacts of these four switches is connected with a different bus bar. Thus contact *1* connects with bus *4* and contact *2* with bus *1*, contact *3* with bus *2* and contact *4* with bus *3*. With the levers of these switches set as in the diagram, generator *G1* feeds into buses *6, 5* and *4*, and as bus *6* is the equalizing bus, the current is taken off from buses *5* and *4*. The small distributing switch *s1* is connected with these buses; hence it is supplied with current from generator *G1*. Generator *G2* connects, through switch *B*, with buses *6, 5* and *1*; hence it will feed into switch *s4*, which is connected with buses *5* and *1*.

In the same way as described in the foregoing, it will be found that generator *G3* feeds into the distributing circuit controlled by switch *s2*, and that generator *G4* supplies the circuit controlled by switch *s3*. If it is desired to connect two of the generators, as, for example, *G1* and *G2*, with the same distributing circuit—say, with the one controlled by switch *s3*—then the four-point switches, *A* and *B*, are set with their levers covering contacts *3*. In the same way any of the generators can be set so as to feed into any of the buses; hence, we have in this construction of switchboard an arrangement whereby any one, or all, of

the generators can be connected with any one of the distributing circuits, but we cannot connect any one generator with more than one circuit at a time.

If we desire to so modify the arrangement as to render it possible for the generators to feed into more than one circuit at the same time, all we have to do is to provide switches that will enable us to connect the various buses. Thus, if by means of a switch we connect buses *1* and *2*, then generator *G4*, with the lever of the *D* switch set as in the diagram, would feed into the circuit controlled by the switches *s3* and *s4*.

Switches used to connect the bus bars are called tie switches, and it is a simple matter to so arrange them as to make any connections desired. By means of one tie switch we can connect buses *1* and *2*, and by means of another we can connect buses *2* and *3*, while a third tie switch will connect buses *3* and *4*. Thus by the use of three tie switches we can connect all the buses from *1* to *4*, and have an arrangement that will be precisely the same as those shown in previous figures, with only three buses, for the four connected buses would virtually act the same as one.

If we desire to make the bus tying arrangement more complete, so as to be able to tie *1* and *3*, or *1* and *4*, or so as to be able to connect any pair without connecting the others, then the switches will have to be more than three—if two-pole switches are used—and their connection will involve more complication. By using three-point switches of the same type as *A*, *B*, etc., and providing one for each bus bar, we can connect the bars in any order desired; for suppose we provide four such switches and connect the center of each one with one of the buses, then, by placing the lever over any one of the three outside contacts, we can connect with any one of the other buses.

There is one objection to the arrangement of Fig. 88, and that is that the several distributing systems are not entirely independent, but are all connected through buses *6* and *5*. Now, it is desirable, when the external circuits are divided into several systems, to have these entirely independent, so that if anything goes wrong with one set of circuits it will not interfere with the operation of the others. When the several systems are partially connected, as by the buses 5 and 6 in this figure, it is possible for a ground or short circuit in one to interfere with the operation of the others: hence, if each system is so arranged as to b

disconnected entirely, the operation will be more satisfactory. Fig. 89 shows an arrangement whereby four generators are connected so as to feed into four entirely independent distributing systems, but in this case none of the generators can connect with all the bus bars. Two of them can connect with three sets of buses, and the other two with only two sets.

It will be seen that generator *G1* connects with switch *S1*, running to the center row of contacts marked *k*. This switch is of the double-throw type, and when turned to the right, as in the diagram, connects with the center row of contacts of the switch *S2*. The right-side row of contacts of this latter switch, marked *j*, connects with the buses marked *C*. Thus with the switches in the position shown, generator *G1* is connected with the *C* buses. If switch *S2* were turned to the left, so as to connect the center contacts with those marked *i*, the generator would be connected with the *B* buses.

If switch *S1* were turned to the left so as to connect with the row of contacts *i*, the generator would be connected with buses *D*. By means, therefore, of the two switches *S1* and *S2* generator *G1* can be connected with either one of three sets of buses—namely, *B*, *C*, *D*. In like manner, generator *G2* can be connected with buses *A*, *B*, *C* by means of switches *S4* and *S5*.

Generator *G3* is connected with switch *S6*, and when the latter is turned to the left, as shown, the generator is connected with buses *B*, and when turned to the right the generator will be connected with buses *A*. By means of switch *S3*, generator *G4* can be connected with buses *C* or *D*, being connected with the *C* set, as drawn.

With the arrangement of Fig. 89, it would be necessary to have twelve switches to be able to connect each generator with any one of the buses, and to tie all the buses together four other switches would be required. If we wished to connect any set of buses with any other set, or with all of them, then these tie switches would have to be of the same type as *A B C D* in Fig. 88; but, as they would have to connect three buses with three others, they would require three times the number of contacts, and would therefore be more complicated in construction.

*Suppose that generator G1* were connected with the center *row of contacts of switch S2,* instead of with S1, and that the

right-side contact of *S2* were connected with the center of *S3* and the left-side row with the center of *S1*, then by turning

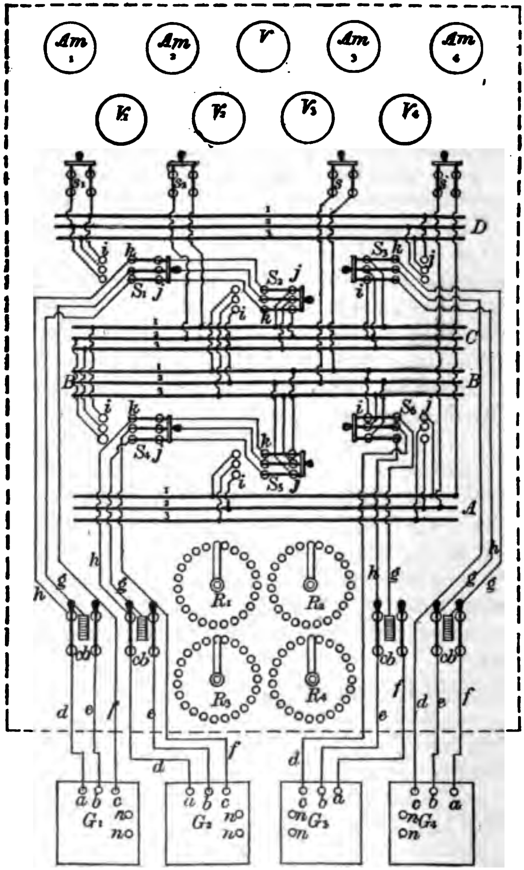


FIG. 89.

*switch S2 in* opposite directions generator G1 could be connected *with the* center of either *S1* or *S3*. If the right and left han

sides of switch *S1* were connected with buses *C* and *D* respectively, and the sides of S3 were connected with buses *A* and *B*, by means of these three switches, generator *G1* could be connected with any one of the four sets of buses, but only with one set at a time. From this explanation, it will be seen that three switches are required to connect one generator with the four sets of buses; hence for the four machines twelve switches would be necessary.

Comparing Figs. 88 and 89, we see that, in the first, only eight switches, four *S*, and four four-point, are required, and only six bus bars, while to effect the same combinations with Fig. 89 twelve switches and twelve bus bars are necessary. From this fact it would, at first thought, be inferred that the arrangement of Fig. 88 is better than the other, but such is not necessarily the case. It depends wholly upon what we want to accomplish. Fig. 89 is the more complicated and expensive, but to compensate for the greater expense and complication, we have the fact that the four sets of buses are entirely disconnected from each other, and no possible disorder of one set can affect the other three.

In order to obtain the greater simplicity of Fig. 88 we are compelled to adopt a type of connection in which the four sets of buses are merged into one, and, although by means of it we are able to feed into four separate distributing systems, these are not entirely disconnected, but, on the contrary, all have the buses *5* and *6* in common, and on that account a disarrangement of one set of circuits might result in disabling the whole system.

When the location of the circuit wires is such that the liability to disarrangement is slight, the plan of Fig. 88 can be used, and it is particularly desirable, if we wish to reduce the cost of construction to the lowest point. If the circuit wires are so located that there is more or less danger of their becoming crossed or short-circuited, then the construction of Fig. 89 is the proper one, even if we desire to practice economy.

Connections of the measuring instruments, ammeters and voltmeters with the generators are not shown in Figs. 88 and 89, as it would lead to unnecessary confusion; but from the illustrations of instrument connections furnished in other figures, the

manner in which the wires should be run can be readily understood when the office of each instrument is explained.

In Fig. 88, p. 134, the four ammeters—marked *Am1, Am2, Am3, Am4*—are to be connected with the four corresponding generators, and so are the four voltmeters. The ammeters can be connected in series in the *e* wires or in the *d* wires of generators *G1* and *G2*, and the *f* and *e* wires of the other two machines. The voltmeters are connected to the *d* and *e* wires in the first two generators and to *e* and *f* in the third and fourth machines. The ammeter marked *Am G* is intended to be used when all the circuits are connected by means of tie switches into one system, and the voltmeter *V G* is used under the same conditions.

With the latter arrangement of circuits—that is, with buses *1, 2, 3* and *4* tied together—the voltmeter *V G* is connected with one side to bus *5* and the other side to any one of buses *1, 2, 3, 4*. The ammeter *Am G* cannot be connected in the circuit with the connections shown in the diagram, for there is no way in which it can be arranged so as to be traversed by the entire current of the four machines. To be able to connect it, it is necessary to provide a seventh bus, to which the wires leading from the generators to bus *5* are attached, or else those leading from the *S* switches to this same bus. The ammeter is then connected between the seventh bus and bus *5*, and thus all the current generated by the four machines has to pass through it to reach the distributing circuits.

In Fig. 89 there are four ammeters, one for each generator, and four voltmeters, as in Fig. 88; but we have no general ammeter and voltmeter, and, as will be seen, it would complicate the circuits to a considerable extent to provide them, for then we should require buses to which one of the wires of the generators could lead, so that between these and the main buses the ammeter could be placed, and also so that the voltmeter could span across from one side of the general system to the other. The circuits could be arranged so as to use a single instrument to indicate the voltage when all the buses are connected into one system, and another instrument to measure the whole current; but as to the voltmeter, the additional complication would not be necessary, since any one of the four voltmeters already connected with the circuit would serve the same purpose.

The voltmeter $V$, located in the center of the top row, is what is commonly called a ground detector, and is simply an instrument provided to test the insulation of the circuits before the current is turned on. The ground detector is not kept in service all the time, but is generally connected permanently either to the ground or to the circuits and is provided with a small switch, by means of which the other side may be connected whenever it is desired to make a test. If the permanent connection is with the ground, then the switch makes the connection with the circuit, and if there is a leak in the insulation at any point, the fact will be revealed by the movement of the indicator of the instrument.

The switchboards we have so far discussed are arranged for the simple two-wire system, which is the one generally used for wiring buildings provided with a separate lighting plant; but for distribution from central stations, and also for large isolated plants, where the current is conveyed to a considerable distance, the three-wire system is used, as will be explained in the following chapter.

## CHAPTER XVIII.

### THE THREE-WIRE SYSTEM.

WITH an electric lamp, the amount of light furnished is directly proportional to the energy of the electric current that passes through it, and the amount of power delivered by an electric motor is likewise directly proportional to the amount of electrical energy of the current that operates it. The voltage in a circuit determines the ability to overcome the resistance that opposes flow of current through the circuit, the same as pressure in steam or water determines the ability to force the fluids through the pipes. Voltage, in fact, is the equivalent of pressure.

Amperes of current measure the amount of current that passes through the circuit. The energy value of an electric current is equal to the product of the volts by the amperes and is expressed in watts. Thus, if we have a current of 10 amperes flowing through a circuit, and the electromotive force that impels it is 100 volts, then the energy will be the product of 10 by 100, or 1,000 watts, or voltamperes. If the current is 20 amperes, and the voltage 50, the watts will still be 1,000, for 20 times 50 is equal to 1,000.

Size of wire required to carry a current depends upon the amperes, and not the volts. If a wire can carry 10 amperes when the voltage is only 20, it can carry 10 amperes if the voltage is 20,000, or any other amount. If the voltage is 20 and the amperes 10, the power will be 200 watts; but if the voltage is increased to 2,000, while the amperes still remain at 10, then the power transmitted will be 20,000 watts. From this, it will be seen that by increasing the voltage from 20 to 2,000, which is one hundred times as great, we also increase the power-transmitting capacity of the current one hundred times, and this we accomplish without increasing the size of the wire.

From this illustration it will be understood that to *transmit power* with the greatest economy by means of electric *current*, we have to use the highest voltage admissible. The *voltage* we can use is determined by the character of the ap-

paratus that is to be operated by the current. For incandescent lights we usually provide a voltage of 110. The current required by a 16-candlepower incandescent lamp at 110 volts is about ½ ampere. If we use lamps that require a voltage of 220, then the current strength will be reduced to ¼ ampere; hence, with the same size wire we could feed twice as many lamps. Within the past few years 220-volt lamps have been made, but they have not come into general use up to the present time.

With 110-volt lamps, we can obtain nearly as great an economy in the use of wire as we could by using 220-volt lamps by adopting what is known as the three-wire system of distribution. This system, briefly explained, consists in so arranging the lamps that the current passes through two in series, instead of one, and, as each lamp requires a voltage of 110, the two combined will utilize 220 volts.

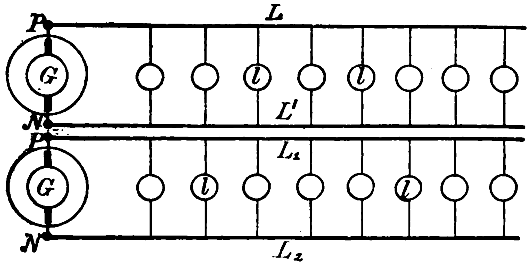


Fig. 90.

In Fig. 90 the circles *G G* represent two generators placed side by side and arranged so that the positive wires of both are uppermost. The lines *L L'* represent the line wires leading from the top generator, and the lines *L1 L2* are the wires leading from the lower machine. The small circles *l l* represent incandescent lamps. The current passing out from the upper generator through wire *L* traverses all the lamps connecting the *L* wire with *L'*, and returns to the generator through the latter wire. The first impression is that nearly all the current in wire L will *go through the first lamp it* meets and thus leave no current for *the other lamps. This* would be the case if the wire offered any-

where near the same resistance to the passage of the current as do the lamps.

As a matter of fact, however, the resistance of the wire is insignificant in comparison with that of the lamps; therefore the current can flow through the wire to the last lamp with just about as much ease as to the first one, and on this account the current divides equally, practically, between all the lamps, although as an actual fact the first lamp gets a trifle more current than the last. If the wires $L L'$ are very long, then their resistance will begin to count. If the wires were extended indefinitely to a distance of 20 miles, and lamps were connected across them, as in the diagram, the current passing through the first one might be several times as great as that through the last one; but in practice the size of the wire is so proportioned, with reference to the length, that the difference in the strength of the current through the first and last lamps is not more than 4 or 5 per cent.

Since the two generators are so arranged in the diagram that the positive wire of the lower one is opposite the negative wire of the top one, it can be seen at once that, if these two terminals were connected, the current generated by the lower machine would readily flow through the second one, if by following this path it could find its way back to the lower wire—that is, to $L2$. Now, suppose that we do not stop at the connection of $P$ of the lower generator with $N$ of the top one, but that we also connect wires $L'$ and $L1$ throughout their entire length; in other words, that we replace these two wires by one, as shown in Fig. 91, then what will happen?

Current generated by the lower generator can flow through the top one, and thus to wire $L$, and it can do this as readily as it can flow to wire $L'$. If the top generator were to draw a current from the center wire $L'$, the direction would be from the line toward the machine—that is, from right to left—but, if at the same time the lower machine attempted to send a current into the center wire, its direction would be away from the generators—that is, from left to right. Now, these two currents would tend to flow in opposite directions, and neutralize each other.

What, then, would be the result? Evidently that no current would flow through the center wire, but that the current passing

through the lamps from the top wire $L$ would continue on and through the lamps between the center wire $L'$, and the lower wire $L''$, and thus reach the lower side of the lower generator. Thus we see that, with this arrangement, the current generated in the lower machine could pass through the second one and then through the two sets of lamps, one after the other, and back to the lower generator. The current would not be doubled in strength—that is, the amperes would not be increased; they would remain the same—but the second generator would give the current a boost, so to speak, and increase its potential by just 110 volts, so that, if it left the first generator at a pressure of 110 volts, it would leave the second one with a pressure of 220 volts.

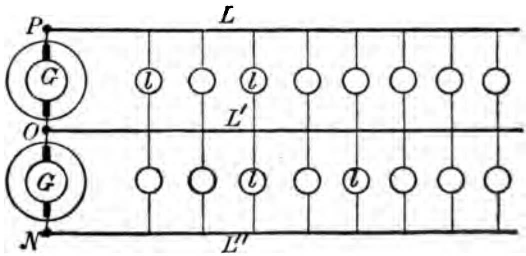


FIG. 91.

This action is precisely the same as if we had two pumps, each capable of forcing the water against a pressure of, say, 50 pounds. If the two pumps worked independently, each one would throw a stream of a certain number of gallons per minute against the 50-pound pressure; if the first pump delivered its water into the suction of the second one, then the amount of water pumped by the two would be the same as that pumped by one when working independently; but the pressure of the water which would be delivered from the second pump would be doubled.

If the number of lamps in the two sets in Fig. 91 were the same, all the current passing through the top set would also pass *through the lower set,* and the center wire L' would be wholly *unnecessary. Under* these conditions, the system would be bal

anced. If, however, there were not the same number of lamps in the two sets, then a current would have to flow through the center wire to or from the generators, and its direction would depend upon whether the greater number of lamps was in the upper or the lower set.

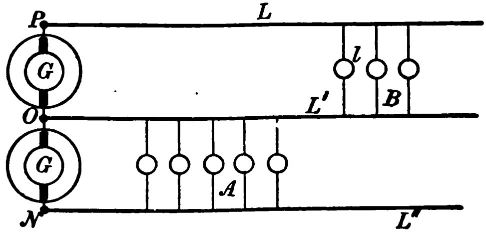


FIG. 92.

In Fig. 92 there are three lamps in the upper set *B*, and five in the lower set *A*. The upper lamps will require only 1½ amperes current, and more current than this cannot pass through them, for their resistance is such that this is all the current that 110 volts can force through them. The lamps in the *A* set, being five, will require 2½ amperes. Now, it is evident that, as only 1½ amperes can come from the upper set, *B*, the remain-

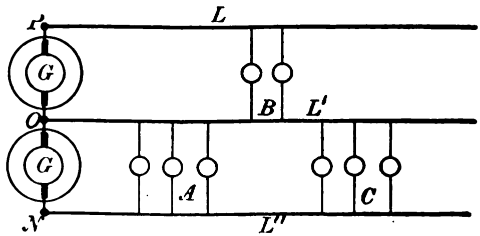


FIG. 93.

ing ampere will have to come from the common junction of the two generators, marked O, and through wire *L'*. In this case, therefore, we see that the center wire is not idle, but that it supplies current for the lower set of lamps in excess of that which passes through the upper set. We can also see that, with

this distribution of the lamps, the upper generator has to furnish a current of only 1½ amperes, while the lower machine furnishes 2½ amperes.

In Fig. 93 we have two lamps in the upper set *B;* three in the lower set, *A,* and three more in the lower set, *C.* As there are six lamps between the center wire *L′*, and the bottom *L″*, the current required is 3 amperes; but for the two lamps in the upper set, *B,* only 1 ampere is required. Thus in this case the lower generator will have to deliver 3 amperes and the upper one only 1 ampere. Of the 2 amperes that will pass out to line *L′* from point *O,* 1½ amperes will pass through the three lamps of set *A,* and the remaining ½ ampere will join the 1 ampere coming from the upper set *B,* and pass through set *C.*

In Fig. 94 there are seven lamps connected between the top

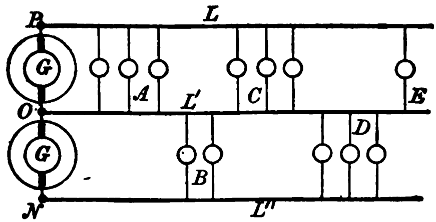


FIG. 94.

line *L,* and the center line *L′*, and between this latter and the lower wire *L″*, there are only five lamps. The upper lamps will require 3½ amperes and the lower ones only 2½; hence of the current that passes through the upper ones, 1 ampere will return to the generators through wire *L′* to the center point *O.* The current passing through the single upper lamp *E*, and that passing through two of those in set *C* will pass through the lower set *D*; while the current passing through the remaining lamp of the upper *C* set, together with the current from one of the lamps in the *A* set will pass through lower set *B*. The current passing through the remaining two lamps of set *A* will flow back to point *O,* and thus through the upper generator.

*In this case,* therefore, the top generator will deliver 1 ampere more than the lower one. It will be noticed also that

the center wire $L'$, the current flows from right to left from lamp $E$ to group $D$, and from left to right from set $C$ to set $D$. Thus in this length of wire there are two currents flowing in opposite directions, but each current traverses a different portion of the wire, the first one being from $E$ to the first lamp on the right side of the $D$ set, and the second being from the two right-hand lamps of the $C$ set to the two left-hand ones of the $D$ set. The same conditions exist with reference to the currents passing to the $B$ set of lamps.

The central wire $L'$ is called the neutral wire, and when the lamps on each side of it are equal in number, so that no current passes to point $O$, the system is said to be balanced. Under these conditions, the same number of lamps can be fed with the two outside wires alone, as with the four wires in Fig. 90, for the middle wires become unnecessary, as there is no current to return to the generators. As in this arrangement the voltage between the outside wires $L$ and $L''$ is 220 instead of 110, the resistance of the wires can be doubled, or, in other words, the cross-section of the wire can be reduced to one-half. From this it follows that, with a perfectly balanced three-wire system, four times as many lamps can be fed with the same weight of wire in the outside lines $L$ and $L''$ as in a two-wire system.

In practice it is not possible to obtain a perfectly balanced system, for, as lights are turned on and off as required, it necessarily happens that at times there is an excess of lights in the upper set and at other times the excess is in the lower set. Furthermore, even when the number is equal in both sets, or on both sides of the neutral wire, as it is commonly expressed, there will be currents flowing for short distances in the neutral line, for the reason that all the lamps will not be connected directly opposite to each other, but will be located with more or less irregularity, as in Figs. 92, 93 and 94. The larger the number of lamps, the nearer the system can be kept to the balanced condition.

In theory, the neutral wire needs to be only large enough to convey the greatest current that will pass through it—that is, to convey all the current required when the lamps are the farthest out of balance. In practice, however, a large margin of safety is allowed, and, as a result, the size of the neutral wire ranges about one-third the cross-section of the outside lines in

very large central stations, to the same cross-section as each outside line in small systems.

If a voltmeter is connected between the top wire and the neutral center, in Fig. 94, it will indicate 110, and another instrument placed between the center and the lower wire will also in-

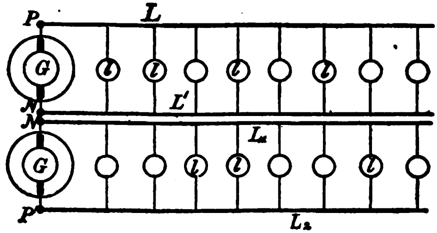


FIG. 95.

dicate 110 volts. A third voltmeter connected across from the upper to the lower wires—that is, from $L$ to $L''$—will indicate 220 volts.

In connecting two generators for the three-wire system, it is necessary not to make the mistake of connecting them with the two positive or the two negative wires together, as indicated in Fig. 95. If such a connection is made, the voltmeters between

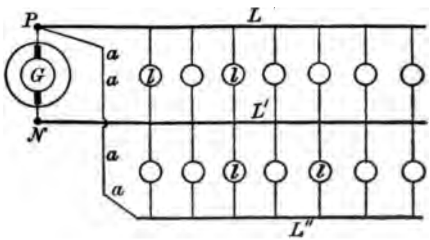


FIG. 96.

the neutral and the outside wires will indicate 110 volts each, just as when the connections are proper; but the instrument connected across the outside wires will indicate zero, instead of 220. *Fig. 95 shows clearly* why this is the case, for here we see *that the two outside* wires are positive. Hence, if the voltage

between the center wires and $L$ is 110 and between the center and $L2$ also 110, then the two outside wires will be at the same voltage, and the difference in pressure between them will be zero. In fact, two generators so connected would be the same thing as one generator provided with two wires leading from one side, as is illustrated in Fig. 96. Clearly in this figure the two wires $L$ and $L''$ are at one and the same potential.

A three-wire system can be arranged with one generator of 220 volts and one of 110—that is, we can use two machines, one of which gives a voltage twice as great as the other. Such an arrangement is illustrated in Fig. 97. If this system is perfectly

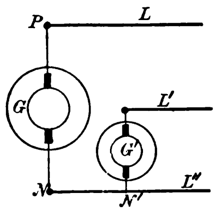


FIG. 97.

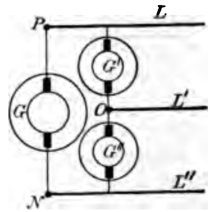


FIG. 98.

balanced, the small generator $G'$ will do nothing, since there will be no current flowing in the neutral wire, $L'$. If the lower side is carrying the greater load, the small generator will carry the difference between the two sides of the circuit, and if the upper side is overloaded, then the current will flow backwards through the small generator driving it as a motor and pulling its prime mover. For this reason the arrangement is not desirable.

A three-wire system can also be arranged with two small machines and one large one of double the voltage, as shown in Fig. 98. There is no objection to this last arrangement, as neither small generator will ever act as a motor.

# CHAPTER XIX.

## SWITCHBOARDS FOR THREE-WIRE SYSTEMS.

FOR the three-wire system, a distributing circuit can be arranged, if we have two or more generators, but it cannot be obtained with a single machine. If we have only two machines, the switchboard is a simple structure; but if there are four, six or more machines, there will be more or less complication, for we shall have to divide the generators into two groups, each one of as nearly the same ampere capacity as possible; and each one of these groups will have to be connected with an independent set of bus bars, so that the machines may be properly equalized—that is, so that an equalizing bus may be provided. From these two sets of buses, connections will have to lead to the main distributing buses, with suitable switches, cut-outs, etc. By explaining simple arrangements, the course of procedure in more complicated cases can be better understood. We will, therefore, start with the consideration of the board presented in Fig. 99, which is arranged with two generators connected so as to feed into one system of distributing mains.

In this figure, the generators are represented by simple rectangular outlines, as was done in some of the previous illustrations. As will be noticed, the generators are not provided with terminals for equalizing wires, none being required. Generator *G1* connects by means of wires *c* and *f* with the circuit breaker, *cb*, which latter connects with the lower contacts of the switch, *S1*. The upper contacts of this switch connect with bus bars *2* and *3*. The wires *g* and *h* lead to the ammeter *Am1*. Generator *G2* connects with switch *S2* and with buses *1* and *2*, a connection being made with ammeter *Am2* by means of wires *g′* and *h′*. Both generators are connected with bus *2*, and while the *f* wire of the first machine connects with this bus, the *f′* wire of the second one connects with bus *1*. In the same way the *c* wire of the first generator connects with bus *3*, but the *c′* wire of the second one connects with bus *2*. This latter bus, therefore, is the neutral bus.

*Voltmeter V1* connects with buses 3 and 2, and voltmeter

*V2* connects with buses *1* and *2*. These two instruments indicate the voltage between the neutral wire and the side of the system with which the generators they serve are connected. The third voltmeter, *V*, is connected across from bus *1* to bus *3*, and thus

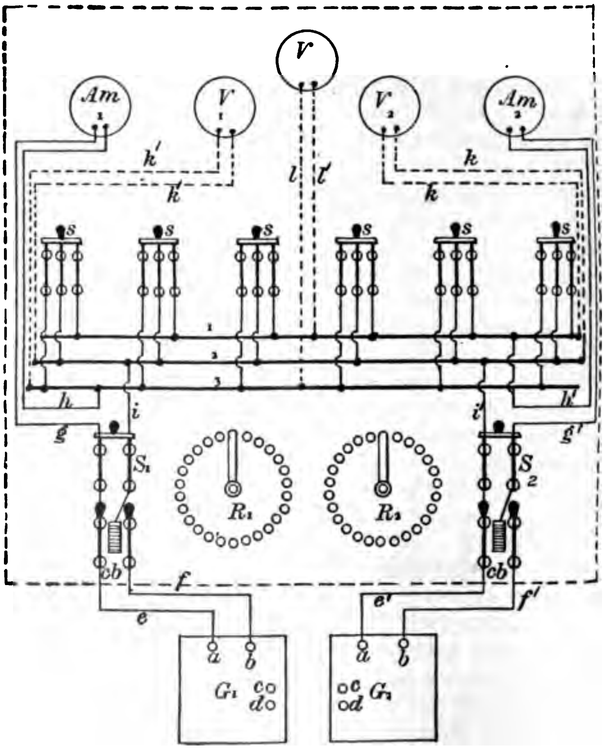


Fig. 99.

serves to show whether the generators are properly connected. If they are, the volts indicated on this instrument will be equal *to the sum* of the volts on the other two, and if they are not *properly connected*, the indication will be equal to the difference *between* the voltages of the other two. This, it must be und-

tood, is upon the supposition that the three instruments are ccurately calibrated, so that all will indicate the same oltage when subjected to the same pressure. Suppose one intrument, say $V1$, indicated 111 volts and the other 112, then, if he connections are proper, voltmeter $V$ will indicate 223, which s the sum of 111 and 112; but if they are not properly conected, the indication will be 1 which is the difference between 11 and 112.

The *s* switches convey currents to the distributing lines vhich are connected with the upper terminals. The lines leading rom these switches to the external circuits are not drawn in the liagram, as they would serve only to complicate its appearance. The switchboard outline is shown in broken lines, so as to be ible to present the circuit connections in solid lines. The wires eading to the voltmeters are also shown broken, so that they nay stand out more clearly by making a greater contrast; but it must not be inferred that by this arrangement we desire to convey the impression that one set of wires is on one side of the board and the other on the opposite side. In actual practice, all wires are placed on the back of the switchboard.

Buildings in large cities that are provided with lighting plants are, as a rule, arranged so that current may be drawn from the street mains should the machinery get out of order or should it be desired to shut down for any cause. The street nains are always arranged upon the three-wire system, while, as a rule, the plant in the building operates upon the two-wire system. The latter system is preferred for private installations, owing to the fact that the lights can be turned on or off without langer of unbalancing the system, while with the three-wire system, as we have explained, such unbalancing is possible, and n small installations very probable.

When a building is wired so as to be supplied from the street nains upon the three-wire system, and from the house plant upon the two-wire system, the arrangement of the switchboard, for a simple case involving the use of but one generator, is about as shown in Fig. 100. In this diagram, $G$ represents the generator located in the building, and $L$ represents the three wires leading in from the street mains. The generator connects first, with the circuit breaker, *cb*, and then with the two-

pole switch, *S*. From the right upper contact of this switch a wire, *i*, runs out and branches into the two parts *j j′*, which are connected with the top and bottom contacts on the left side of the double-throw switch *S1*. The wires *L* from the street mains are connected with the contacts on the right of this *S1* switch. When the generator is in use, the current from the

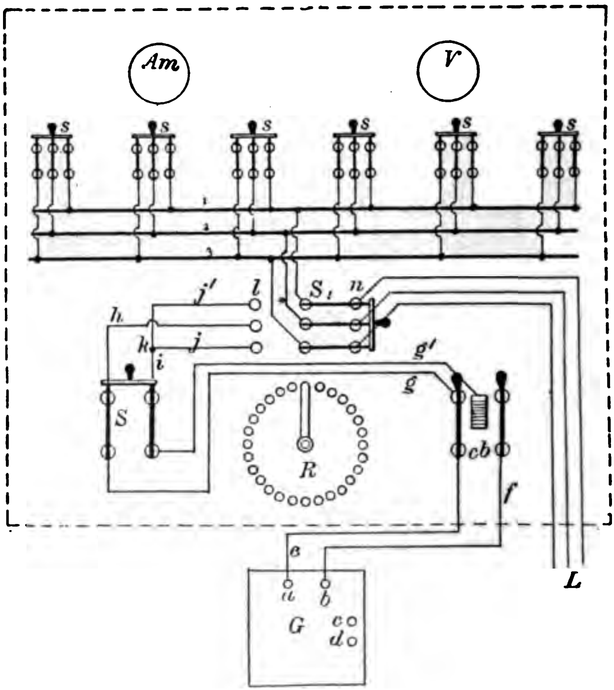


Fig. 100.

binding post *b* passes to buses *1* and *3*, and the current from post *a* passes to bus *2*. Thus, if bus *2* is negative, buses *1* and *3* will be positive, and we shall have the type of connection shown in Fig. 96 of the last chapter. When the street wires are to supply the current, the switch *S1* is thrown in the direction

shown in the diagram—that is, to the right—and each one of the three wires connects with one of the buses.

When the street service is used. the current flowing through the central wire, or bus *2*, which is the neutral wire, is much smaller than that through the other wires, and, as we have already made clear, will be nearly zero, if the system is properly balanced. When the current is supplied by the generator *G*, the center wire will carry as much current as the other two combined; hence the center wire must be made double the cross section of the others. Thus, while in a regular three-wire system the neutral wire is smaller than either of the other two, a building wired for two-wire house supply, and three-wire street supply will have the neutral made of a cross section equal to the other two wires combined.

In Fig. 100 a voltmeter and an ammeter are shown. These are connected with the generator; that is, the voltmeter is connected across from wire *e* to wire *f*, and the ammeter is connected in series in either one of these wires. It is not necessary to provide instruments to measure the current when it is taken from the street, for whatever its voltage maye be, such it will have to remain, as the attendant in the building has no control over it. An ammeter would be of no particular value, as the magnitude of the current is not a measure of the power consumed. For determining the electrical energy drawn from the street mains an instrument called a wattmeter is used, which indicates by means of dials, after the fashion of a gas meter, the number of watt-hours used.

Fig. 101 shows a switchboard arranged for a building having a plant consisting of two generators and provided with means for connecting with the street mains, when desired. The generators are arranged to operate on the three-wire system, and, as will be seen, they are connected with the lower set of bus bars marked *A* in precisely the same way as the generators of Fig. 99. These buses can, if desired, be connected directly with the distributing circuits—at least with some of them—but, as will be noticed, if such a course were pursued, all the circuits so connected could not be operated from the street mains, for the latter are connected by means of switch *S* with the B buses. If the two sets of buses were connected by means of a tie

switch provided for the purpose, then, by closing this switch, the street current would be run into the *A* buses, and thus feed all the circuits connected therewith. The objection to this ar-

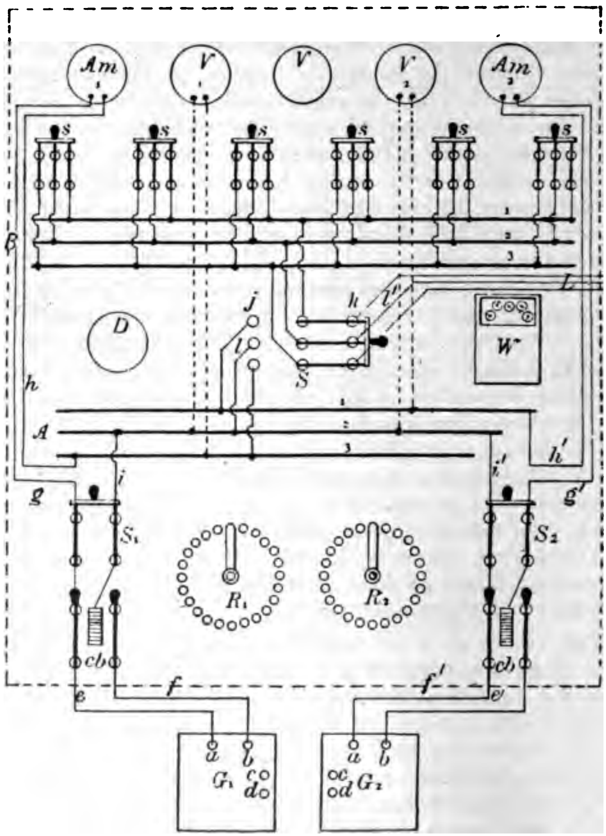


Fig. 101.

*rangement* would be that, to change over from generator to *street service*, it would be necessary to open switches S1 and S2, *as well* as to throw over the *S* switch. In performing thes

operations the attendant might forget to open the two generator switches before throwing the *S* switch, with a result more or less serious.

If the street current was in the same direction as that of the generators, the result would be that the voltage of the latter would be added to that of the street current and create a decided disturbance, increasing the current through the generators to a dangerous point. If the generators were delivering current opposed to that of the street main, they would be driven as motors if their voltage happened to be the lower, and if higher, their current would be suddenly increased, as it would flow out to the street circuits as well as into the house system.

With the arrangement shown in Fig. 101 there is little danger, for when the switch *S* is thrown to the right, the house circuits will be connected with the street mains, and when thrown to the left the generators will be connected and the street mains will be completely cut off. The *A* buses are, therefore, added for the purpose of insuring against accidents by closing the circuit between the street mains and the generators *G1* and *G2*. A tie switch between the two sets of buses would defeat this object; hence it would not be advisable, and on that account none of the house circuits that would have to be supplied with current when operating from the street mains should be connected with the *A* buses.

As will be noticed, the voltmeters and ammeters are connected with the *A* buses and the *g h* wires running from the *S1* and *S2* switches. They, therefore, measure the currents of the generators. *W* represents a wattmeter, which would be connected with the wires leading in from the street mains—that is, with the *L* group. The manner in which the wattmeter is connected with the wires *L* cannot be made intelligible without giving a complete diagram of the connection of the circuits of the instrument and also of the principles upon which the latter operates, and this we will not undertake to do in this chapter.

At *D* is shown an ammeter which is intended to be used when the street current operates the system, its object being to indicate whether the system is properly balanced or not, so that lamps may be cut out or in on either side, if necessary. This ammeter is connected in the neutral wire coming from

the street mains to switch *S*, and thus the magnitude of t current it indicates shows the extent to which the system is c of balance.

This arrangement of switchboard, as shown in Fig. 1( can be used with two or more generators operating on the tw

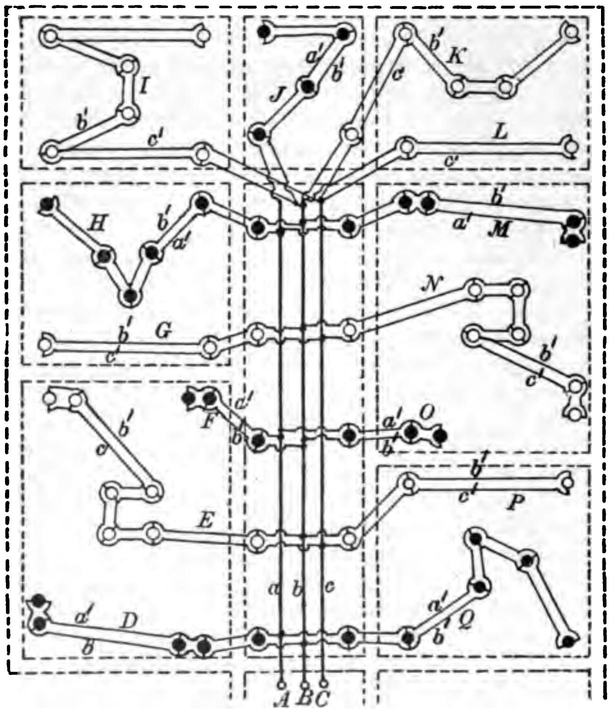


Fig. 102.

wire system and arranged to throw over to a three-wire str service, for all the change necessary would be to connect bc generators with buses *1* and *2* and use bus *3* for the equalizi *wire.* Then there would be no connection between bus *3* of t *4 set and the throw*-over switch *S*; but instead of it we wo

connect bus *1* of the *A* set with the outside wires of the *B* set and bus *2* with the center wire—that is, bus *2* of both sets would be connected, while bus *1* of the *A* set would connect with buses *1* and *3* of the *B* set.

Fig. 99 shows how the switchboard is arranged for two generators connected with one three-wire system of distribution, and Fig. 101 indicates how we can proceed to arrange a board for several distributing systems; for it can be readily seen that from the *A* buses any number of independent buses can be fed by simply providing proper switches to connect them when desired. Both these figures show arrangements where there are only two generators; but if we have a greater number, we divide them into two groups and run each group to an independent set of buses, adopting an arrangement such as is shown in Fig. 86. Then we would provide a third set of buses, and the positive and negative wires from the equalizing buses would be connected with these, the positive of one set and the negative the other being joined to form the neutral wire.

One objection to the three-wire system is that, unless the lamps and other devices operated by the current are so disposed as to keep the two sides of the system nearly balanced, it will not operate satisfactorily. Under certain conditions, the current on one side may become so strong as to overheat the wires and cause an excessive loss of energy in overcoming the resistance. To obviate this trouble as far as possible, the lamps should be connected with the two sides of the system in small groups and with due regard to the length of time they are used.

Fig. 102 gives a general idea of the way in which this can be accomplished. The diagram represents a section of the floor of a building, the rooms being outlined in broken lines. *A B C* represent the three main wires running from top to bottom of the building, and *a b c* are the feeders with which the lamps in the several rooms are connected. The shaded circles indicate the lamps connected on one side of the system, and the unshaded circles are those on the other side. Each set of wires running out from *a b c* supplies but a few lamps, and the total number is equally divided between both sides of the system, so that, *with all the lights in* use, the current in wire b would be *practically nothing.*

# CHAPTER XX.

## Construction of Switches.

TWO types of switches are generally used for circuits carrying large currents. One of these types is known as the side-throw, and the other as the knife-blade. The latter is used to a much greater extent than the former, and all things considered has several points of superiority. A switch to be entirely satisfactory must be as compact as possible, consistent with the work it has to perform. It must be so constructed as to insure good contact at all times, and must move with sufficient freedom to render its manipulation easy and certain.

In the knife-blade type, compactness is obtained, and the space required for the device, on a switchboard, distribution board or other location—where it is associated with other devices—is less than with the side-throw type, owing to the fact that the switch lever moves in such a direction as not to interefere with its surroundings.

Side-throw switches, as ordinarily made, are not so sure to maintain a perfect contact as the knife-blade type, owing to the fact that the switch lever is held against the contact blocks by side pressure, which may fail through the loosening of the tension spring. In the knife switch, the blade drops into a groove, formed by two pieces of sheet metal, which possess sufficient spring to insure a good contact at all times. The knife switch can be manipulated with as great ease as the side-throw, and is really more certain because the tension of the latter, being from one side, is liable to force the lever so far out of line as to cause it to strike against the end of the contact, instead of sliding over it.

Fig. 103 illustrates the simplest form of knife switch, which is called a single-throw, single-pole, single-break switch. Switches of every type are called single-pole when they are so made that they can open the circuit through only one wire. When arranged so as to open the circuit in two wires, they are of the double-pole type, and if they open the circuit in three wires, they are of the three-pole type. In some cases it is necessary

to have a switch that will open the circuit in a large number of wires at the same time and such switches are called multiple-pole switches. With switches of the knife-blade type, a single-pole switch has only one blade, which, in Fig. 103, is marked *D*. A two-pole switch has two blades, a three-pole has three blades, and so on for any other number of poles.

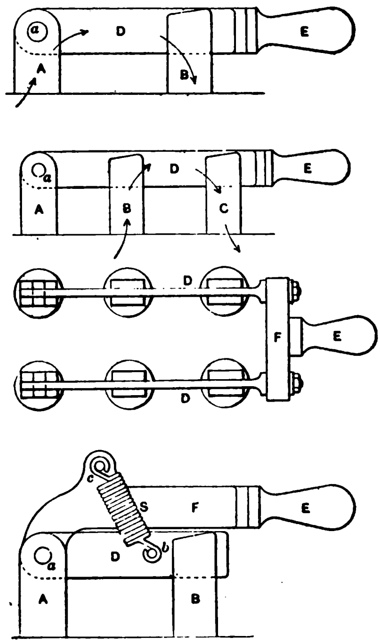


FIGS. 103, 104, 105, 106.

In Fig. 103, the blade *D*, when raised, is drawn out of the contact groove *B* and thus breaks the circuit at one point only, the current entering and leaving the switch as indicated by the arrows. It can be readily seen that by providing two grooves, *B C*, Fig. 104, when the blade is raised, it will open, or break

the circuit in two places; for one break will be between *B* and *D* and the other one between *D* and *C*. By increasing the number of contacts, the circuit could be broken at more points.

From this it will be seen that Fig. 103 is a single-break switch, because it breaks the circuit at one point only, and for the same reason, Fig. 104, is a double-break switch, while if two more contacts were provided it would be a quadruple-break switch. Sometimes confusion arises as to the difference between a multiple-pole and a multiple-break switch, owing to the fact that they both break the circuit at several points; but there need be no perplexity if it is remembered that the multibreak switch can only rupture the circuit in one wire, while the multipole switch opens several circuits.

When two-pole switches are used, one of the blades is connected with the wire coming from one terminal of the generator, and the other blade is connected with the remaining wire. If a three-pole switch is connected in a three-wire circuit, each blade is connected with a separate wire, so that when the switch is opened it breaks the circuit through the three wires.

Fig. 105 shows the blades of a two-pole switch as they appear when seen from above; that is, this figure is a plan view of the switch in Fig. 104. The cross bar *F*, which holds the two blades *D D* is made, in part or in whole, of a suitable insulating material, so that there may be no electrical connection between the blades. In a three-pole switch there are three blades arranged side by side, just as are the two blades in Fig. 105, the three being perfectly insulated from each other. The switches shown in Figs. 103 to 105 can only be moved so as to perform one operation, namely that of connecting the blade, or blades, with the contact *B*, or disconnecting them. Thus this type of switch only enables us to connect the wire attached to *A*, in Fig. 103, or to *B*, in Fig. 104, to another wire which is attached to contact *B* in the first figure, and to *C* in the second.

In some cases, however, it is necessary to have a switch so arranged that the wire attached to the first terminal of the switch may be connected with either one of two or more wires. It can be readily understood that, if in Fig. 103 we place a contact, similar to *B*, on the left side of *A*, and attach to this a wire, with this arrangement we can connect *A* with two different

wires, according to which way we throw blade *D*. Such a switch, therefore, would be a double-throw, because we could throw the switch blade in two directions, and thereby connect the wire attached to *A* with two different circuits.

If *A* is made so as to swing around on a pivot, then we can arrange a number of *B* contacts in a circle around *A*; and by swinging *D* around so as to be in a line with any of the contacts, we can obtain a switch that will enable us to connect the wire attached to *A* with several circuits. In other words, we shall have a multiple-throw switch.

When the switch blade *D* is pulled out of the contact *B*, a spark is produced, and this burns away the edges of the blade and the ends of contact *B*. The slower the movement of *D*, the more the burning; for the spark will keep up as long as the distance between the blade and contact is not greater than the voltage can span across.

To reduce the burning effect to the lowest point, it is necessary to move the blade *D* as rapidly as possible, and to accomplish this result switches are constructed upon the principle illustrated in Fig. 106. The action in this construction is very simple. When the handle *E* is raised, the spring *S*, which is secured to *F* at *c* and to the blade *D* at *b*, is stretched, until the tension developed in it is sufficient to pull *D* out of the contact *B*; then the blade flies up rapidly, and thus reduces the time during which the spark holds out. To make the device work well, the spring *S* is so proportioned, that the blade is not drawn out of *B* until *F* has moved a considerable distance; then when *D* begins to move it will be able to swing clear out of *B*. This kind of switch is commonly called quick-break, and is made in a great many designs.

Although a knife switch is a simple device, it must be properly constructed to give good satisfaction. The blade *D* and the contacts into which it drops must be made so as to fit accurately. If not, the heat developed at the joint with a strong current may oxidize the surface, and possibly burn out the contact. The best way to secure a good contact, is by means of the construction illustrated in Figs. 107 and 108, which show the blade at *C* as seen from the end, and the contacts at *A* and *B B*, the latter being the sides. These sides are made of sheet brass

or hard-rolled sheet copper possessing sufficient spring to cause them to bend in, as in Fig. 108, when the blade is drawn out. The part *A* should be of the same width as the blade *C*, so that when the latter is in position the sides *B B* will fit against it at all points (see Fig. 107). If *A* is made too narrow, as in Fig. 109, the result will be that the sides *B B* will make contact only at the lower corners; and if *A* is too wide, the contact of the sides with the blade will be only at the upper corners, unless *B B* are bent in the way shown in Fig. 110, but this construction is more difficult than that of Fig. 108.

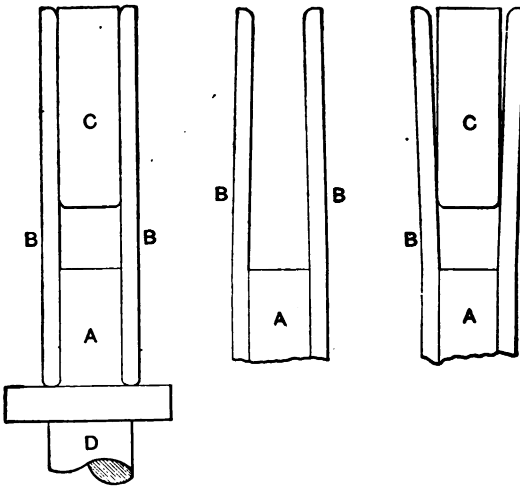


FIGS. 107, 108, 109.

Some switches are made with the sides *B B* as shown in Fig. 111, and in this way a good contact can be obtained in a new switch, with less accurate workmanship, but after several months of use, the burning away of *B B* at the inner corners of the bend, will weaken them so as to cause the lower ends to bend out further, and thus not come in contact with the lower edge of the blade C. This construction serves to enable a good contact to be made in a new switch with inferior workmanship, but it is not equal to Fig. 108.

In cases where a switch is to carry very heavy currents, and the circuit is opened often, the thin side pieces *B B* are not

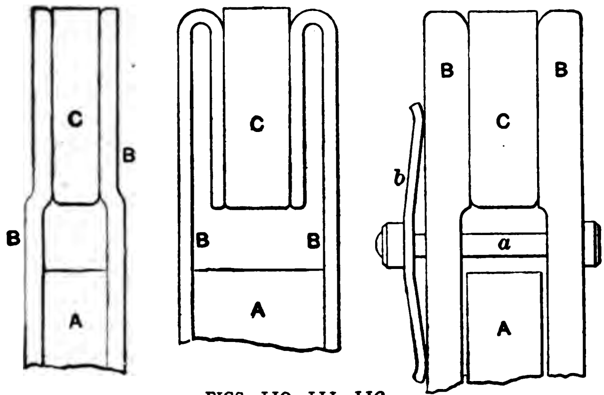


FIGS. 110, 111, 112.

desirable, as they soon burn out. In such cases it is not uncommon to substitute castings, Fig. 112, these being pressed to-

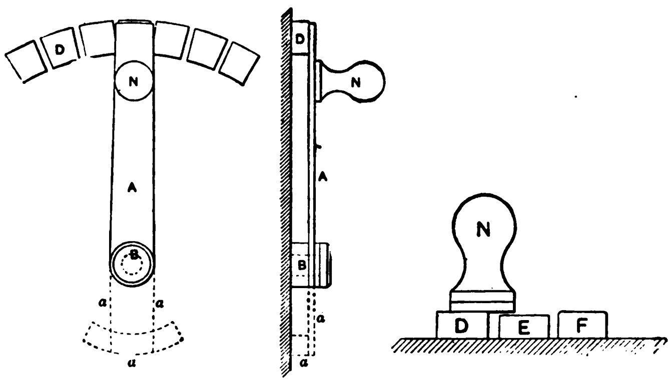


FIGS. 113, 114, 115.

*gether by means of a suitable* spring, as is illustrated by bolt *a* *and spring b.*

Side-throw switches are generally used in cases where it is desired to make connection with several contacts in succession, as for example in field rheostats. Figs. 113, 114 and 115 illustrate a switch of this class. As commonly made, these switches depend for a good contact between the blade *A* and the contacts *D*, upon the elasticity of *A* and the spring of a small washer placed between *A* and the head of the pivot *B*. If this joint becomes loose, however, the lever *A* will not press firmly against the contacts; hence, in many cases, the lever is extended beyond the pivot, and a circular piece is provided, as shown in dotted lines *a a*. This construction is far superior to the simple type, and is generally used by the best makers.

In switches of this latter type it is necessary that all the contacts *D* be of the same height; for if not, the lever will not touch all of them at all times, and as a result, more or less serious sparking may be produced. The effect of unevenness is shown in Fig. 115. In properly constructed switches, the contacts *D* are turned off, so as to insure an even surface.

# CHAPTER XXI.

## SWITCHBOARD CONSTRUCTION.

WHEN a man who is not versed in electrical matters takes a peep behind a good sized switchboard, and sees the complicated network of rods and wires, he is impressed with the idea that only a wizard can make head or tail out of such a labyrinth, while the man who is capable of designing it must be possessed of an intellect far above the ordinary. Such a conclusion, however, is very far from being correct. A switchboard is in reality a simple affair, and can be constructed by a man who is far from being an intellectual giant.

The only way to acquire a knowledge of any subject is by starting in with simple cases, and following these up with more complicated work, ending with that which presents the greatest difficulties. To pursue this course to the end in this chapter would make it entirely too long, but we will follow it as far as is necessary to enable any one who will give the subject careful study to continue it to the end without assistance. Elaborate switchboards arranged to operate a number of generators, feeding into many circuits, are necessarily more difficult to design than simple structures; but once the general principles are understood, a little hard thinking will enable one to master the most complicated cases.

Suppose that we wish to plan out a switchboard for a single generator, which is to be so connected that it can feed into a network of wires that furnishes light for a moderate sized building. Let this system of wiring be so arranged as to be divided into three sections, these to be so connected that any one may be operated alone, if desired. Before we can start to plan out the switchboard, we must make a list of the instruments, switches, etc., that will be needed to perform the required operations.

Starting from the generator, we find as the first thing on the list, the field rheostat, without which we cannot regulate the voltage. The next device will be a switch by means of which the generator can be connected with the switchboard wiring.

As it is possible for something to go wrong with the distributing circuits, and in such a way as to allow the current to increase suddenly to a far greater strength than the generator can safely carry, we must provide some kind of protective device. Two types of such devices are commonly used, one being the safety fuse, and the other the circuit breaker. Fuses are generally used to protect branch circuits from abnormal increase in current, but for the main circuit the only proper thing, except for the cheapest installation, is a circuit breaker.

As the distributing circuits are to be divided into three sections, and these are to be arranged so as to be operated independently, it will be necessary to provide three switches for these three sections of the wiring system. In order that we may be able to ascertain the voltage, we must have a voltmeter, and for the purpose of indicating the strength of the current we must have an ammeter.

These are all the devices that are actually required, provided the wiring is wholly within the building. If some of it is in the open air and thus exposed to be struck by lightning, then we must also have one or two lightning arresters; one, if only one of the circuit wires runs outside, and two, if both the positive and negative are exposed to the open air.

Assuming that we limit the instruments and other devices to those first enumerated, namely, field rheostat, main switch, circuit breaker, three distributing switches, ammeter and voltmeter, then the next step is to ascertain what size switchboard will be required to accommodate them. To determine this point we must know the size of each device, and this we can readily obtain from the manufacturers' catalogs, as the sizes are given for the different capacities. The space separating the various switches, etc., we can judge by examining some switchboard in use, and noting whether anything appears to be too much cramped, or whether there is more room in some places than is actually required.

Switches must all be placed so as to be easily reached, and so that the spark produced when they are opened will not damage any of the other devices. The location of the various devices is, to a certain extent, a matter of judgment, but the general arrangement can be understood from Fig. 116. Here

field regulator is located at *a*, back of the board, and the hand wheel, *F*, on the front of the board is mounted upon an extension of the switch pivot. With the regulator in this position, the engineer can watch the voltmeter at *V* while adjusting the voltage. At *A* we locate the ammeter so as to balance, in appearance, the voltmeter. If we are to have a clock, which is a desirable piece of furniture in an engine room, we place it at *C*, and on either side of it we locate an incandescent lamp. The three distributing switches are located at *E E E*, and the main

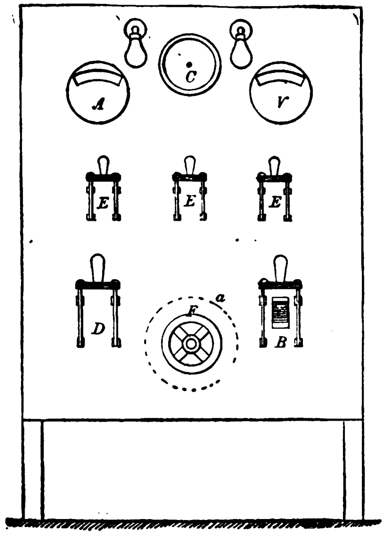


FIG. 116.

generator switch is at *D*, while at *B* is placed the circuit breaker.

If we placed the circuit breaker and the main switch side by side, and the field regulator in one corner, the connections at the back of the board would be shortened, but the appearance would not be so good. This location of the instruments would show us the size of board—provided the generator is of small capacity, say 150 amperes or less; but if it is of 200 to 300 amperes, we must locate the connections at the back of the board before taking it for granted that we have all the room required.

When the current is less than about 500 amperes, it is well to make the connections of wires, or rods, of such size as to give a cross section of 1 square inch for every 800 amperes. If our generator gives a current of 200 amperes, we shall require bars of a cross section ¼ square inch; that is, 1 inch wide and

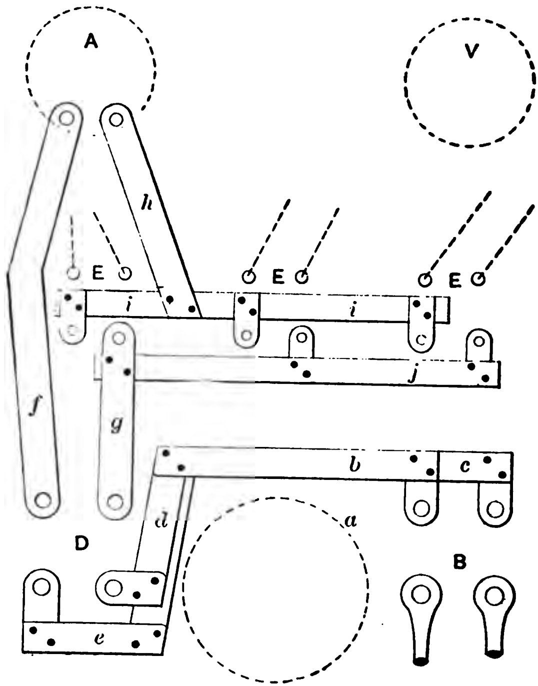


FIG. 117.

¼ thick. It would facilitate the construction, however, to make the bars 1½ inches wide and about 3-16 thick. The way the bars are put together is shown in Fig. 117, which illustrates the connections at the back of the board with the switches and instruments arranged as in Fig. 116. The two circles A, V, are the ammeter and voltmeter, and circle a shows the location of

the field rheostat. This rheostat is connected with the field coils in the same way as it would be, if placed by the side of the generator.

Connections from the binding posts of the generator run to the lower terminals of the circuit breaker *B*, and the upper terminals of the latter are connected with the lower terminals of main switch *D*. The bar *b* runs above bar *c* and must be separated from it by about ½ inch of clear space. This separation can be obtained by using hardwood blocks faced with about 1-32 inch of mica. The blocks should be made as wide as the rods so that they may be bound together by means of tape and shellac. The bar *e* is the left-hand end of *c*, just as *d* is the left-hand end of *b*.

From the upper left-hand terminal of the main switch *D* we run a rod to one of the binding posts of the ammeter as shown at *f*. This rod we bend so as to clear the ends of the bars *i* and *j*. From the other binding post of the ammeter, we run a bar *h* to the top horizontal bar *i*, and from the right-hand top terminal of the main switch *D* we run a bar *g* to the lower horizontal bar *j*. The bars *i* and *j* are called buses, and from these the current is taken off for the distributing circuits. It will be seen that the right-hand lower terminals of the three *E* switches are connected with bus bar *j*, and that the left-hand terminals are connected with bus *i*. The upper terminals of these switches are connected with the wires leading to the three sections of the distributing mains; hence, by opening or closing any one of these switches we can cut the current off, or turn it on to any of the sections.

After having planned out the connections, as in Fig. 117, we shall be in a position to determine definitely the size of the switchboard. The latter we can make of marble, or marbleized slate, and we secure it to a frame made of angle iron in the manner clearly indicated in Figs. 118 and 119. For a small board, these angles should be about 2½ by 2½ inches. If the cross bars *B B* are placed as shown, the front of the board will have a more finished appearance than if they are set with the flanges on the opposite sides; but on the other hand, the marble panel *C*, Fig. 119, will not come flat down on the side angles *A* and blocking pieces *a a* will have to be provided at the points

where the fastening screws are located. Both styles of construction are in common use.

The lower ends of the side angles *A A* are fastened to the floor and the upper ends are secured to the ceiling or the side wall by stay rods *b*, as in Fig. 119. The space back of the board can be as narrow as 2 feet, if the width of the board is such

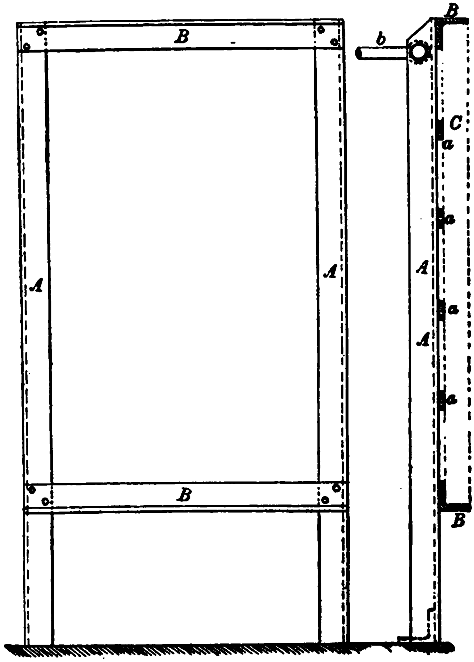


FIGS. 118, 119.

that a man can reach easily to the center without passing behind it, but for wider boards, the clear space should be at least 2½ feet. The location should be where daylight can be obtained back of the board, if possible; but care must also be taken that there are no windows near by, through which rain can beat in on the back connections.

# CHAPTER XXII.

## AMMETERS, VOLTMETERS AND WATTMETERS.

AMMETERS, voltmeters and wattmeters operate upon principles that are easily explained and understood. These instruments are made in the form of simple indicating instruments, which show by the position of the pointer, the strength of current, in the case of an ammeter, the voltage, in the case of a voltmeter, and the power, in the case of a wattmeter. They are also made in the form of recording instruments, the record being traced upon a disk or roll of paper in precisely the same way as in a recording steam gage.

Ammeters and wattmeters are also made in the form of

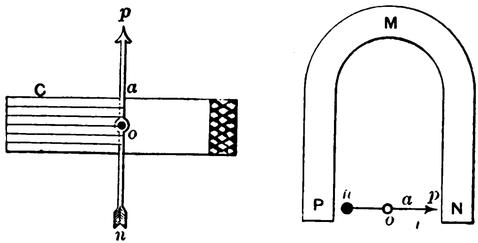


FIGS. 120, 121.

integrating instruments; that is, they are provided with dials, like a gas meter, upon which the ampere hours, or watt-hours are registered, so that from the reading of the dials the amount of current or energy that has passed through the instrument in a given period can be ascertained. In the present chapter we will confine ourselves to an explanation of the indicating instruments.

In Fig. 120, *C* represents a coil of magnet wire, that is, wire with an insulating covering; *a* is a magnetized needle, or it may be simply a piece of iron. If *a* is a magnetized needle it will point toward the north, if there is no current flowing in coil *C*, but if there is a current in the coil, the needle will assume the position shown, or one just the reverse of it, depending

upon the direction of the current flowing through *C*. This fact shows that an electric current exerts a force to turn a magnet needle at right angles to it, and this force is always exerted, no matter what the surrounding conditions may be.

In Fig. 121, *M* represents a magnet and *a* is a magnetized needle. In this case the needle *a* will not point toward the north simply because the attraction of the poles of the magnet is very much greater than that of the earth; therefore, the needle will be drawn into the position shown in the figure.

Fig. 122 shows an instrument, which can be made either as a voltmeter or an ammeter, but not as a wattmeter, for reasons that will be presently explained. This instrument is a simple combination of the principles illustrated in Figs. 120 and 121. The circle *M* is a permanent magnet like the one in Fig. 121, and *C* is a coil of magnet wire, as in Fig. 120, while *a* is a magnetized needle. From the explanation of Fig. 121 it will be understood that, if there is no current flowing through the coil *C*, *a* will rest in the position in which it is drawn. If the magnet *M* is removed, and a current is passed through *C*, the needle *a* will swing into the vertical position, as in Fig. 120. If the magnet *M* is now replaced, it is evident that the movement of the needle into the vertical position will be resisted by the attraction of the poles *P N*.

If, however, the current passed through *C* is large, the force with which it will act to twist *a* into the vertical position will be so much greater than that with which the magnet *M* tends to hold it in the horizontal position, that it will swing around nearly into the vertical position. If the current is not so large, the needle *a* will not swing so far around, but it will swing part of the way. If the current through *C* is weak, the needle will move toward the vertical position, but the angle through which it will move will be so small that it may hardly be visible with the naked eye. In any case, however, it is true that any current will cause a deflection of the needle, and the stronger the current the greater the deflection.

From this it follows that, if we have an instrument that is *calibrated* for amperes, for example, and place that instrument and one like that in the illustration, in the same circuit, we can lay off a scale as shown at *S* which will show the position to

which the pointer *s* is moved by currents of different strengths. Having done this much we can use the instrument for testing currents in other circuits, for when we place it in a circuit, if the pointer *s* swings to the 40 mark, we know that the current is of

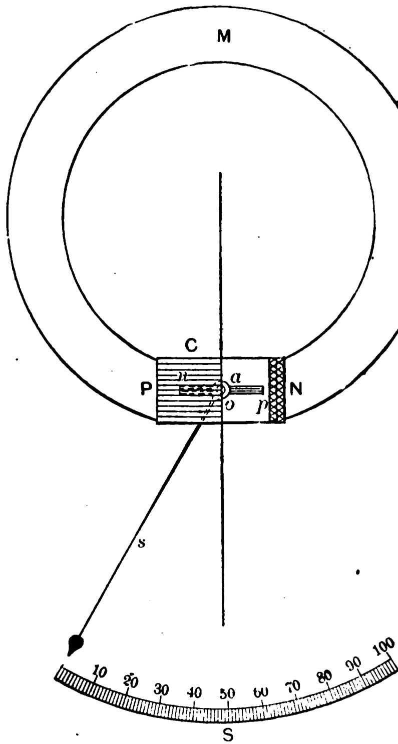


FIG. 122.

the same strength as that which passed through the coil when the scale was drawn, and this may be 40 amperes, or that due to 40 volts, according to the way in which the coil C is connected in the *circuit*.

*If we wish the instrument* to be an ammeter, the coil C is

made of a few turns of wire, large enough to carry all the cur rent it is designed to measure. For very large currents, sa 200 or 300 amperes, $C$ will have only one turn. To mark th scale $S$ we shall have to place the instrument in a circuit in seri with a standard ammeter, and the current supplied will have t be as strong as the highest reading on the scale.

If the instrument is to be a voltmeter, the coil $C$ will b wound with very fine wire, and there will be many hundre or even thousands of turns. To mark the scale $S$ we shall n connect it in series with a standard instrument, but in parall with it; that is, we shall place the standard voltmeter and o instrument in parallel across a circuit, in which the voltage c be varied from zero up to the highest pressure for which the i strument is designed. To mark the scale, we increase the vol

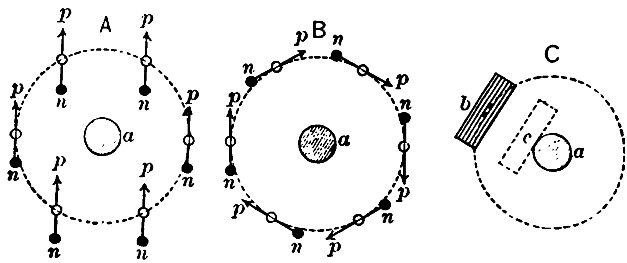


FIGS. 123, 124, 125.

age gradually, and mark the divisions on $S$ to correspond w the divisions on the standard instrument.

Fig. 122 embodies the principle on which many of the co mercial instruments are based. Figs. 123, 124 and 125 illustr a principle upon which other instruments are constructed. In Fi 123 and 124, $a$ represents a vertical wire looked at from the e and the arrows $p$ $n$ are small magnet needles. If no current passing through the wire, all the needles will point toward t north, as in Fig. 123, but as soon as a strong current pas through the wire, all the needles will turn into the positic shown in Fig. 124.

*If the* needles are held so that they can move freely tow *the wire, they* will do so, for the attraction of the $p$ pole o

needle for the *n* pole of the one ahead of it will draw the two together, and this attraction taking place between all the needles, they will draw together until their ends come into actual contact. If after they have come together, two needles are removed, the remaining four will close up until their ends meet, and if now two more are removed, the two remaining ones will close up as far as they can in the effort to bring their ends together; that is, they will swing directly against the sides of the wire *a*. If one of the two needles is removed, the remaining one will be drawn toward *a* just the same as if there were other needles in position. From this it will be seen that, if through the wire *a*

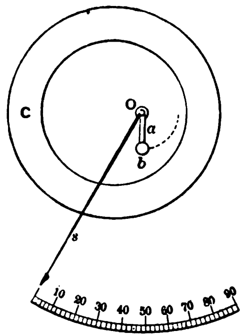


FIG. 126.

in Fig. 125 a current is flowing, a needle placed at *b* will be drawn into the position *c*, and this will also be the case if *b* is simply a piece of soft iron instead of a magnet needle.

In the instrument illustrated in Fig. 126, the foregoing principle is utilized. In this figure, *b* represents a small bar of iron which is supported by the arm *a* so as to swing around the center *O*. The circle *C* represents a coil of wire through which the electric current passes. Owing to the action just explained, the bar *b* which is seen end on in the illustration, is drawn toward *C* swinging in the curve indicated. In this way the pointer *s* is caused to swing over the scale *S*, which latter is marked off in the manner already explained in connection with Fig. 122.

To make the instrument an ammeter, $C$ is made of a few turns of large wire, and for a voltmeter it is made of a great many turns of very fine wire, the same as in Fig. 122. In the latter figure, the force with which the current swings the needle around toward the vertical position is resisted by the attraction of the poles $P$ $N$ of the magnet. In Fig. 126 the force with which $b$ is drawn toward the coil $C$ is resisted by the attraction of gravity upon $b$, that is, by the fact that $b$ has to be lifted against a constantly increasing leverage.

In connection with Fig. 120 we said that, if $a$ is made of soft iron it will be drawn into the vertical position by the force

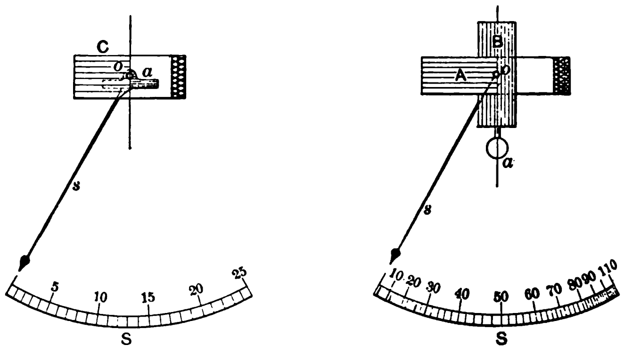


FIGS. 127 AND 128.

of the current flowing in the coil. This principle is utilized in some forms of instrument, as shown in Fig. 127. In this arrangement, the bar $a$ is placed a trifle below the center upon which it swings so that as it is moved from the horizontal position the weight has to be lifted and thus a force is provided to resist the action of the current passing through the coil.

Fig. 128 illustrates the principle of an instrument which can be used not only as an ammeter or a voltmeter, but also as a *wattmeter*. It is commonly called an electrodynamometer. from the fact that it measures the force acting between two electric currents. $A$ and B represent two coils of wire, through which electric currents are passed. When there is no curre

passing, coil $B$ is held in the position shown by the weight $a$ or a spring. The coil $A$ is held permanently in its position. When currents pass through both coils, $B$ exerts a rotative force so as to place itself parallel with $A$. This force is resisted by the weight $a$ so that to increase the angle through which $B$ is rotated, the current must be increased; that is, the angle of swing of $B$ is proportional to the current.

One objection to this type of instrument, which is not of any great consequence, is that the scale divisions cannot be made equal, as will be noticed in the illustration. This objection, however, is not of much account, and in many other respects this is the best of all instruments. To make an ammeter or a voltmeter, the two coils $A$ and $B$ are connected in series, and the current that passes through one then flows through the other. They can also be made with the coils connected in parallel; the latter is the construction best suited to ammeters and the former to voltmeters.

To make a wattmeter, on the principle of Fig. 128, the stationary coil is wound with large wire, and is connected in series with the circuit so that all the current passes through it. The movable coil $B$ is wound like a voltmeter, with many turns of very fine wire, and it is connected across the terminals of the circuit, like a voltmeter. From this it will be seen that the stationary coil is wound like an ammeter, and the movable one like a voltmeter, so that the instrument is virtually a combination of these two instruments.

If the current in the main line increases, the force exerted by the stationary coil $A$ increases, and if the voltage increases, the force exerted by the movable coil $B$ increases; hence, the movement of the needle will respond to changes in the strength of the current, or of the voltage. Now the watts are the product of the volts and the amperes, so that an instrument that is varied by changes in the volts and also in the amperes, if properly adjusted, will indicate watts.

Instruments constructed upon any of the principles explained in the foregoing can be used for continuous currents, but only those made upon the principle of Fig. 128 can be used successfully with alternating currents.

# CHAPTER XXIII.

## Ammeters and their Connection.

As THE principles of operation of electrical measuring instruments have now been fully explained, it is proposed to show how ammeters are used, and how they are connected in circuits for different purposes.

Ammeters are instruments that measure the strength of electric currents. The unit of current strength is the ampere, so that an ammeter shows the number of amperes flowing in the circuit. The simplest of all, and the one most commonly used, is called an indicating ammeter, and simply indicates the strength of the current passing through it. Two other kinds of instruments are the recording and the integrating types.

The recording ammeter is constructed somewhat like a recording steam gage, and traces on a roll of paper, or a circular disk, a line which shows the strength of the current at all instants during a certain interval of time, which may be one day or more, according to the construction of the recording mechanism. An integrating ammeter indicates upon dials the product of the amperes that have passed through it by the time during which they have passed. The unit of measurement in these instruments is the ampere-hour, which means a current of 1 ampere flowing for 1 hour. It is not necessary that the current strength be just 1 ampere, and the time just 1 hour, to be equivalent to an ampere-hour. All that is required is that the time taken in hours multiplied by the current in amperes be equal to 1 ampere hour. Thus a current of 2 amperes flowing for half an hour is equivalent to a current of 1 ampere flowing for an hour, or to a current of ½ ampere flowing for 2 hours, and in each case the ampere-hours are the same.

Integrating ammeters were formerly called recording ammeters, and are still so called to some extent but since the introduction of true recording instruments they have been generally designated as integrating instruments, and this name is the more appropriate since they show the sum total of the am-

pere-hours that have passed through them. In the following paragraphs we will discuss the indicating ammeter.

Since the object of an ammeter is to indicate the strength of the current that flows in the circuit, it must be so connected that it will indicate all the current passing through the circuit. If only a portion of the current is passed through the ammeter, it will indicate the strength of that portion only. If we know the relation between that portion and the total current, then by a simple multiplication we can determine the strength of the whole current, but if we do not know that relation, we cannot.

For example, suppose we know that the part which we pass through the instrument is one-tenth of the whole current, then, if the instrument indicates 5 amperes, we know that the total current is ten times as strong, or 50 amperes. Ammeters that are intended to indicate currents of 300 amperes or less are so constructed that all the current flowing in the circuit in which they are connected passes through the instrument; but instruments of larger capacity are commonly made so that only a portion of the current passes through them, the greater part being diverted through a side resistance or shunt as it is called. The object of this modification is to obviate the necessity of running wires of very large size to the ammeter.

Fig. 129 shows the way in which an indicating ammeter is connected in the circuit; *a* and *m* represent the armature and field coils of a generator, and *A* the ammeter. As will be seen the wire *b*, which comes directly from one of the terminals of the generator, connects with the left-hand binding post of the instrument; hence, before the current can reach wire *c* it must pass through the ammeter, and thus cause the latter to indicate its strength. In Fig. 129 the strength of the current returning to the generator through wire *d* is precisely the same as the strength of the current passing out through wire *b c*, so that, if we were to connect an ammeter at *A'* in wire *d*, it would indicate the same number of amperes as *A* in wire *b c*. If the two indications are not exactly the same, it is because they do not agree with each other.

Although a diagram such as Fig. 129 shows clearly how an ammeter is connected, when one sees such an instrument on the face of an elaborate switchboard he may not easily be able to

trace out the connections. This, however, is caused by complication arising from the mutiplicity of connecting at the back of the board.

Actual switchboard connections for an ammeter are in Fig. 130, and are rendered clear by omitting all the connections.

In this diagram, as in Fig. 129, the generator arm and field are shown at *a* and *m*. The outline in broken represents the face of the switchboard, and the parallel lin

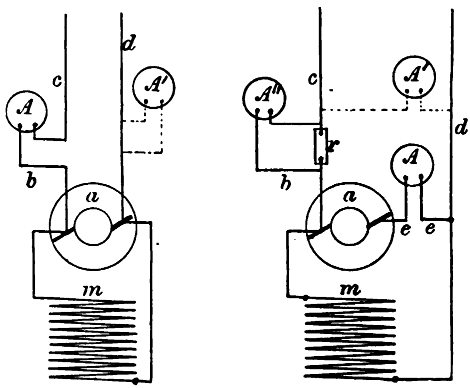


FIGS. 129 AND 131.

and *N* are the bus bars. The ammeter is shown at *A*, an will be seen the wire *b* from the generator runs to it in prec the same manner as in Fig. 129. The instrument is conn with the upper bus *P* by means of wire *d*. From bus *P* current passes out to the distributing circuits and return bus *N*, from which it goes back to the generator through wi

In actual switchboards, a main switch is located at the marked *S*, and the path of the current is apt to be lost at point, which fact accounts, in a measure, for the difficulty perienced in tracing out the true connections. In most in addition to the main switch at *S*, a circuit breaker is in at *cb*, which still further complicates the connection

ıratus shown at *R* is the field regulator by means of which voltage of the current is adjusted.

If an ammeter is connected as shown in Fig. 129 it will cate the strength of the current that flows in the external ɹit, but it will not show how much current flows through armature of the generator. As a rule we do not care to w exactly the strength of the current flowing through the ature, but if it is desired to ascertain this, we can find it

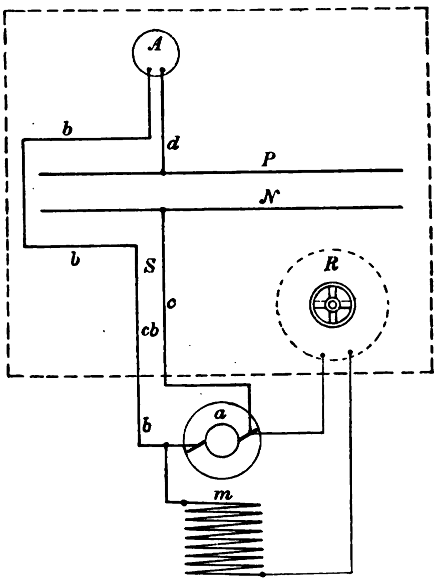


FIG. 130.

:onnecting an ammeter as shown at *A* in Fig. 131. From an ıection of Figs, 129 and 131 it will be seen that, in the latter, the current flowing through the armature of the generator ;es through the ammeter *A*, while in Fig. 129 it does not, e the *current that flows* through the field coils is independent *ıat which passes into* the external circuit.

*'rom the foregoing*, it will be seen that we can connect an

ammeter in either one of the wires that lead to the external circuit, as at $A$ or $A'$ in Fig. 129, or we can connect it in either one of the wires that lead directly from the armature terminals to the binding posts of the generator, as is indicated at $A$ in Fig. 131, but we cannot connect an ammeter across the circuit, as shown at $A'$ in Fig. 131; that is, with one binding post connected with wire $c$ and the other with wire $d$. If we should make such a connection, the result would be disastrous to the generator as well as to the instrument, because the resistance of an ammeter is practically nothing, hence, if connected as at $A'$ in Fig. 131, it would short-circuit the generator and produce the results that generally follow a short circuit. This is an important point that should always be remembered to avoid accidents.

As already stated, instruments that are intended to indicate very large currents are connected so that only a portion of the current passes through them. Such an arrangement of an ammeter is shown at $A''$ in Fig. 131. At $r$ a shunting resistance is introduced in the main line and the ammeter wires are connected with its opposite ends. The shunt $r$ is made by the manufacturer of the instrument, and its resistance is properly proportioned to make the instrument indicate the actual strength of the current flowing in the wire $c$, notwithstanding that only a small portion of it passes through the ammeter.

To illustrate the manner in which the shunt $r$ is proportioned let us suppose that the instrument $A''$ is to indicate 1,000 amperes, while the actual strength of current passing through it is only 10 amperes. In such a case, the resistance of the coil in the instrument must be 99 times as great as that of $r$, so that the current may divide in the proportion of 99 to 1; that is, for every one ampere that passes through the instrument, 99 will pass through $r$, so that when the total current flowing in $c$ is 1,000 amperes 10 amperes will be flowing in wire $b$ and through the ammeter, and 990 amperes will flow through $r$.

This arrangement is used to reduce the size of the wires that connect the instrument with the circuit. With the proportions above given the connecting wires for the ammeter would be No. 8 or 10 B. & S. but, if the whole current passed through the instrument, we should require copper bars 1 inch in diameter to make the connections. These bars would not only be much

more expensive than the small wires, but would take up a great deal more room, and thus increase the size of the switchboard. Furthermore, if all the current passed through the ammeter, its coils would have to be made of large copper bars, so that the instrument itself would become a bulky affair.

Any ammeter can be arranged by the use of a shunt *r* so as to indicate any desired strength of current. To do this all that is necessary is to find the resistance of the instrument, and then proportion the shunt *r* accordingly. For example, if we desire that one-tenth of the current pass through the instrument so as to increase its range ten times we provide a shunt *r* having one-tenth the resistance of the instrument. In any case, the strength of the current through the resistance shunt *r* and the instrument is in the inverse ratio of the two resistances.

Since the resistance of an ammeter is quite low, unless we have instruments for measuring such low resistances, we cannot adjust a shunt *r* so as to be very accurate; for low as the ammeter resistance is, it is ten or possibly one hundred times as great as that required in the shunt. For this reason it is practically out of the question for any one not provided with the most delicate testing instruments to make such adaptations.

Even when we have the proper facilities to make the shunt, there is the objection that the dial of the instrument will indicate the actual current passing through it, so that we must provide a new dial, or multiply the readings by the ratio between the resistance of the ammeter and that of the shunt. Considering these facts the best thing to do when you want a shunt ammeter is to get it from the makers.

Besides the ammeters used on switchboards, there are portable instruments which are used to measure the strength of current in any circuit, if desired. The way in which these instruments are used can be easily understood from the diagrams Figs. 132 and 133. Suppose, for example, that it is desired to measure the current that supplies a number of lamps used to light a room. Generally there will be a switch, to the binding posts of which the distributing wires are attached.

When such is the case, it is a simple matter to connect an ammeter, *for all we have* to do is to turn the switch so as to *open the circuit and then* remove one of the wires from one of

the binding posts and insert the ammeter. The arrangement is illustrated in Fig. 132, in which *a b* represent the binding posts of the switch, the latter being located at a point below the diagram. To place the ammeter *A* in the circuit, the wire *p* is removed from binding post *a* and is inserted in one of the binding posts of the instrument. With a short wire the other binding post of the instrument is connected with *a*. If the switch is now closed the current will pass through *A*.

If the direction of the current is wrong, the indicator of the instrument will not swing forward, but will move a short distance back, coming up hard against a stop. If that occurs, the switch is opened again and the connections with the instrument are reversed; that is, wire *p* is connected with the lower post

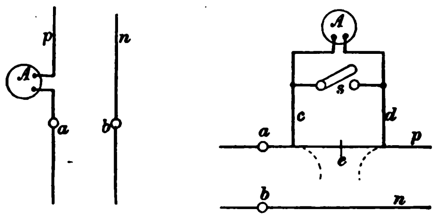


FIGS. 132 AND 133.

and the upper post is connected with *a*. If we now close the switch, the ammeter needle will move forward and indicate the strength of current.

In some cases there may not be a switch handy by means of which the current can be turned off, and then we shall be compelled to connect the instrument into a live circuit, as it is called. The way in which this is done is shown in Fig. 133. In this diagram the wires *p* and *n* are supposed to convey the current to the lamp circuit, and are attached to the binding posts *a b*, but there is no switch by means of which the current can be cut off. To connect the ammeter, the wires *c* and *d* are properly secured to *p* by clamping, soldering or otherwise. A switch is connected at *s*, and the wires *c d* are extended further so as to be connected with the binding posts of the ammeter A.

When the connections are all properly made, switch s is

closed, and then *p* is cut at *e* and the ends are bent out of contact, as indicated by the broken lines. The current will now pass through switch *s* from *c* to *d* and thus to *p*, and a small portion will also pass through *A*. If we open *s*, all the current will pass through *A*, and, if it flows in the right direction, the indicator will swing around and show the number of amperes. If the direction of the current is wrong, *s* is closed and the instrument connections are reversed.

After we have made the test, switch *s* is closed and the ammeter is removed. To avoid an accidental opening of the circuit at a future time by the turning of switch *s* the ends of the wires that we remove from the binding posts of the instrument are fastened together firmly, generally by twisting them tight around each other. When this precaution is taken, the circuit will remain closed, even if *s* is opened.

If it is desired to remove the testing wires *c* and *d* we can draw the ends of *e* together and make a proper splice, after the ends of *c* and *d* have been twisted together, so as to remove all danger of opening the circuit while the splice is being made. This precaution is not actually necessary in low-voltage circuits, but it is a wise course to follow, for then it becomes a second nature to do things in this way and reduces the liability of making mistakes when handling dangerous currents.

# CHAPTER XXIV.

## Connecting Voltmeters in Circuit.

ELECTROMOTIVE force is the force that impels a current through the circuit—that pushes it along, so to speak. It is substantially equivalent to pressure in steam, and in fact is sometimes spoken of as electric pressure. Electromotive force is measured in volts, and thus it has come to be common practice to speak of the electromotive force acting in a circuit as the voltage. A voltmeter is an instrument that indicates the voltage, or electromotive force, that acts in a circuit.

In Chapter XXIII it was stated that ammeters are made in three forms, as indicating instruments, as recording instruments, and as integrating instruments—the latter indicating the sum total of the ampere hours that have passed during a given time. Voltmeters are made only in the forms of indicating and recording instruments; the third form is unnecessary, because all we require to know is what the voltage may be at any instant, which we ascertain by looking at the dial of an indicating instrument; or what the voltage has been at every instant of time during a certain period, which we can find by inspecting the chart of a recording voltmeter. Recording voltmeters act like recording ammeters.

Voltmeters are connected in circuit as shown in Fig. 134, in which *a* and *m* represent the armature and field coils of a generator, and *V*, the voltmeter. As will be seen, one of the wires from the instrument is connected with line *p* and the other with line *n;* thus the voltmeter short-circuits the entire external circuit. If an ammeter were placed in this position, there would be a big rush of current through it, sufficient to stall the generator and probably do great damage, if a circuit breaker were not connected in the circuit.

With a voltmeter, however, the case is different, the difference being due to the fact that while the resistance of the ammeter is low, that of the voltmeter is high. The ammeter is provided with a coil of large wire consisting of only a few turns in large instruments, only one turn. The voltmeter on the

other hand has coils wound with many turns (running up into the thousands) of very fine wire. Owing to this difference in the resistance, while the current passing through an ammeter connected in the position shown in Fig. 134 would be very great—limited only by the capacity of the generator—the current passing through the voltmeter would be so small as to be measured in thousandths of an ampere.

Strength of the current that passes through a voltmeter depends upon the resistance of its coils and the voltage that acts to force a current through them. The resistance does not

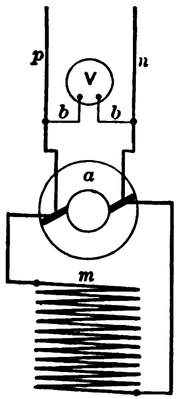


FIG. 134.

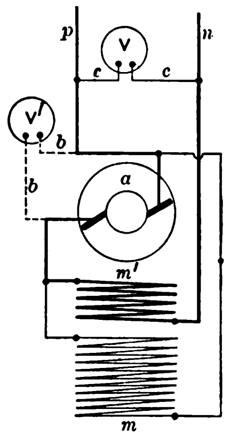


FIG. 135.

change, hence the only way in which the strength of the current can be changed is by varying the voltage; therefore, the instrument will show variations in voltage, if properly calibrated.

From the foregoing it will be seen that ammeters and voltmeters act in precisely the same way, that is, by the variation in the strength of the current that passes through them. The only difference between the two instruments is that the ammeter is constructed so as to be traversed by large currents and is calibrated to show the number of amperes that pass through it, *while the voltmeter* is constructed so as to be traversed by

weak currents, and is calibrated to indicate the voltage that forces the current through it.

If a voltmeter is connected as in Fig. 134, it will indicate the highest voltage acting upon the external circuit, and will show a greater number of volts than if connected across the circuit at a point farther away from the generator. The reason for this difference is that it requires some electromotive force to drive a current through even the shortest length of con-

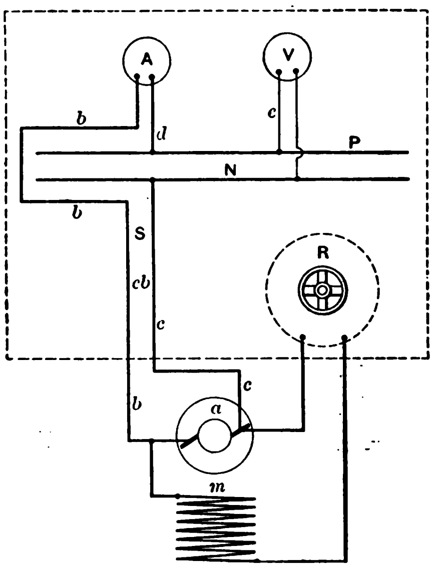


FIG. 136.

ductor, and therefore the voltage left after forcing current through a portion of the circuit will be less than before.

In Fig. 134 the generator shown is of the simple shunt type, this being used so as to simplify the diagram. When a compound-wound generator is used, it is necessary to be more particular in connecting the instrument, for, if it is connected directly with the armature terminals, it will show a greater number of volts than actually act upon the external circuit. Th

fact is illustrated in Fig. 135, in which a properly connected voltmeter is shown at *V*, while one that only spans the armature is shown at *V'*. As can be seen at once, the current in wire *n* cannot reach the armature until it has passed through the field coil *m'* and, as already stated, a certain amount of electromotive force is required to drive the current through *m'*, hence the voltage between the wires *p* and *n* cannot be as great as that between *b b*, so that instrument *V'* will indicate higher than instrument *V*.

On a switchboard the connections of a voltmeter are simple and easily traced out, but for the purpose of making the matter perfectly clear, Fig. 136, which shows the connections in the plainest possible manner, is presented. The generator armature and field are shown at *a* and *m*. The rectangle in broken lines indicates the switchboard; the lines *P* and *N* are the bus bars; an ammeter is shown at *A* and a voltmeter at *V*. The latter is connected with both the bus bars, these taking the place of the wires *p* and *n* in Fig. 134. The spaces marked *S* and *cb* show the positions of the main switch, and the circuit breaker. The distributing circuits are taken from the two bus bars, generally with a small switch in each circuit, so that it may be disconnected independently of all the others. Such switches are not provided, however, unless required.

Fig. 137 is a diagram which will enable us to make clear several uses to which voltmeters are put, and also the meaning of a number of terms commonly used. In this diagram, *a* represents the armature of a generator, and *m*, the field. The wires *p* and *n* represent a distributing circuit from which a number of lamps or motors, *l*, are operated. If a voltmeter is placed at *V*, and is connected with the points *s s'''* by means of the wires *b b*, it will show the electromotive force, or voltage, acting to force the current from *p* to line *n* at the points *s s'''*. This voltage is the total electromotive force acting upon the circuit, and it acts to drive a current through the first lamp, *l*, which is also connected with the points *s s'''*.

As already stated, the current cannot be driven through wire *p* from *s* to *s'* without the expenditure of some electromotive force; hence, if we place a second voltmeter at *V'* and connect it with the points *s s'* by means of the wires *c c*, the indications upon

its dial will show the number of volts required to force the current from $s$ to $s'$ through wire $p$. The electromotive force acting at the point $s$ to force a current through the lamp $l$ to point $s'''$, or through wire $p$ to point $s'$, is called the potential of the point $s$. In like manner the electromotive force acting at point $s'$, to drive the current to point $s''$, is called the potential of the point $s'$. The voltage indicated by the instrument $V'$ is called the difference of potential between the points $s$ and $s'$, or the fall of potential from $s$ to $s'$. It is also spoken of as the line drop between $s$ and $s'$, or simply the drop between $s$ and $s'$.

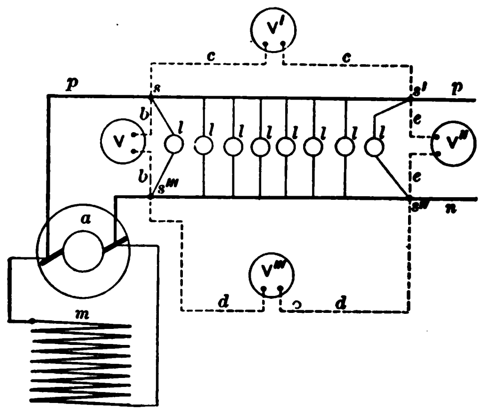


FIG. 137.

The difference of potential between the points $s$ and $s'''$, as indicated by the voltmeter $V$, is referred to as the electromotive force of the circuit, but the voltage acting between the points $s'$ and $s''$, to force a current through the right-hand lamp $l$, is generally referred to as the difference of potential between the points $s'$ and $s''$, and it will be equal to the number of volts indicated upon the voltmeter at $V''$.

Current flowing through wire $n$ from $s''$ to $s'''$ will take a certain amount of voltage, in the same manner as in wire $p$, and this voltage will be indicated upon an instrument placed at $V'''$ and connected with the points $s''$ $s'''$, or the difference of potential between these points. As the sum of all the parts cannot be more

than the whole, we shall find that, if the voltages indicated upon the three instruments $V'$, $V''$, $V'''$ are added, they will be equal to the voltage indicated by the instrument $V$. If we add the voltages indicated by instruments $V'$ and $V'''$ and deduct it from the reading of $V$, we shall get the volts indicated by $V''$.

From this it will be seen that when we speak of line drop, or line loss, we refer to the voltage used up in overcoming the resistance of the circuit wires; that is, to the voltages indicated by the instruments $V'$ and $V'''$ in Fig. 137. The voltage indicated by the voltmeter $V'$ cannot be properly referred to as the line drop, as it shows the drop on only one side of the circuit, and it must therefore be called the drop in line $p$, or the drop on one side of the circuit.

Voltage indicated by the instrument $V''$ cannot be spoken of as a drop or fall in potential, for it is the electromotive force acting in the circuit between the points $s'$ and $s''$, and the active electromotive force is never referred to as a drop in voltage. Strictly speaking it would be correct to speak of the indication of voltmeter $V''$ as the fall of potential between the points $s'$ and $s''$, but it is not customary to refer to the difference of potential between points on opposite sides of the line in this manner. The word "fall" is used to indicate that the electromotive force absorbed, or balanced, between two points is lost in overcoming a dead resistance, and not in performing useful work.

To avoid making mistakes in the use of terms, it is well to remember that the electromotive force lost between two points in the circuit wires, such as $s\,s'$, can be referred to as the drop or fall of potential between these points, or we can call it the difference of potential between the two points; but the electromotive force acting between opposite sides of the circuit, to perform useful work, should always be spoken of as a difference of potential or as the electromotive force, or voltage, acting between these points.

# CHAPTER XXV.

## CONNECTING WATTMETERS.

THESE instruments, which show the amount of energy, or power, in an electric circuit, are made in three different types; indicating, recording and integrating. The indicating has a pointer that swings over a dial and shows the power in watts flowing through the circuit. The pointer responds instantly to any variations in the power; therefore, it is continually changing its position.

The recording wattmeter, traces on a roll of paper, or a disk, a line that is the record of the power in the circuit at every instant during the period covered by the record. The integrating wattmeter shows the amount of energy that has passed through the circuit during a given time; the unit of measure is a watt-hour; that is, 1 watt acting for 1 hour of time, or any other amount of power and interval of time which when multiplied by one another will equal 1 watt-hour. Thus 5 watts passing through the circuit for 12 minutes will be equal to 1 watt-hour and so will ½ watt acting for 2 hours. In this chapter we will explain the way in which indicating wattmeters are connected in the circuit and also the way in which they are used.

Indicating wattmeters are commonly placed upon switchboards so that the power delivered by the generators at any instant may be known at once by simply looking at the instrument. If an ammeter and a voltmeter are on the switchboard, the power, for direct current, can be obtained at any time by multiplying the reading of one instrument by that of the other, as the power is the product of the volts by the amperes; but it is more convenient to be able to read off the power from the dial of a wattmeter than to obtain it by making the multiplication just mentioned.

In addition to the greater convenience, the indication will generally be more accurate, because it is next to impossible to take the readings of the two instruments at the same instant of time; and, furthermore, we may make a slight mistake in one or both of the readings, and thus the calculation for the power

may be considerably out of the way. The wattmeter, if properly adjusted, will make no mistakes, so that the only source of error is in the reading of the instrument, and this error is not likely to be great.

Unless we know the way in which a wattmeter is connected in a circuit, it is difficult to trace out the connections of an instrument on a switchboard. Fig. 138 shows in a simple manner the way in which wattmeters are connected. The construction of these instruments is fully explained in Chapter XXII.

Looking at Fig. 138, it will be seen that the wire *b* from the generator connects with the right binding post of the wattmeter *W* and that the left post is connected with wire *d;* thus the main current is passed through one of the coils. One of the

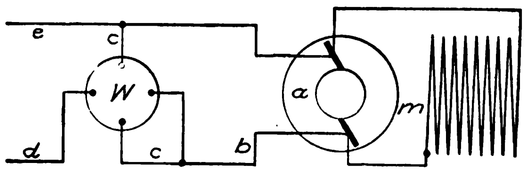


FIG. 138.

wires *c* carries a branch current from *b* to the other coil of the instrument, and the remaining end of this coil is connected by a wire *c* with the opposite side of the circuit—that is, with wire *e.*

We have shown the binding posts of the wattmeter *W* located at the top and bottom and at the sides, but this is not the position in which they are found in actual instruments. We have so located them to indicate the positions of the coils with which they are connected. As will be seen, the wires *b* and *d* connect with the instrument in the same way as if it were an ammeter, while the wires *c c* connect it as if it were a voltmeter. From the nature of these connections it might be supposed that if the wires *c c* are disconnected, the instrument would act as an ammeter and indicate the number of amperes in the *circuit; and likewise that* if the wires *b* and *d* were disconnected, *leaving only wires c c,* the instrument would act as a voltmeter

and indicate the number of volts. Such a conclusion is not strictly correct. The instrument connected in either of these ways would not act at all, because the indicator is moved by the attraction of each coil upon the other, and unless currents flow through both coils there will be no attraction.

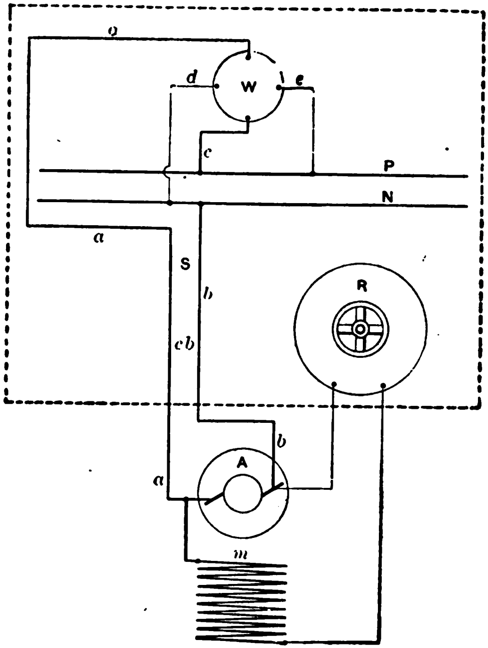


FIG. 139.

By a modification of the construction, an instrument could be made so that it would indicate watts when all the wires were connected, or amperes when *b* and *d* were connected, or volts when only *c c* were connected; but it would be unpractical to consider such an arrangement in this article; furthermore, we are not aware that such an instrument is manufactured.

*Wattmeters* when mounted upon a switchboard are con-

nected, as clearly shown in Fig. 139. The generator armature is shown at *A* and the field at *m*, *R* being the field regulator. The outline in broken lines represents the switchboard. The lines *P N* are the bus bars. By comparing this diagram with those given in chapters XXIII and XXIV, it will be seen that the upper and lower binding posts of the instrument are connected with the generator and the upper bus *P* by means of wires *a* and *c*, in the same manner as an ammeter is connected; and that the side binding posts are connected with both the buses by means of wires *e* and *d*, in the same manner as a voltmeter.

Wattmeters are used not only to indicate the power flowing in a circuit, but also to make tests of motors or other devices. Portable instruments are made, which are substantially the same as those used on switchboards, although generally smaller and of somewhat different design. Whenever it is desired to ascertain the power flowing in a circuit, a wattmeter is connected to it in precisely the manner illustrated in Fig. 138.

As in the case of the ammeter, it is a simple matter to connect a wattmeter if the circuit can be disconnected from the source of energy, so that it may be opened while the instrument is being connected. This, however, is not always the case; hence, it is frequently necessary to know how to connect an instrument when the circuit is alive. The way in which this is done is shown in the diagram Fig. 140. As will be seen, the wires *c* and *d* are connected with wire *p* and a switch is placed at *a* so that the instrument may be cut out if desired. The side connections of the wattmeter are run, one to wire *c* through wire *e*, and the other to the opposite side of the circuit, to wire *n*. In this last-named connection, a switch is provided at *s*, so that both the wattmeter coils can be cut out of circuit when desired.

After the wires *c* and *d* are properly connected, including switch *a*, the line wire *p* is cut at *l* and the ends are bent out of the way. When the test is completed, the ends at *l* can be restored to their former position and properly spliced, after which the instrument and its connections can be removed. If the connecting wires used for making the test (that is, *c*, *d*, *e*, etc.) are not removed, *the ends of c* and *d* should be firmly connected *when the wattmeter is* removed, and the wire connecting with

line *n* should be placed where it cannot possibly make a connection with wire *p*.

If a wattmeter is connected to a circuit in the manner illustrated in Fig. 140, and *a b* are the binding posts to which the terminals of a motor are connected, then the reading on the instrument *W* will show the watts of electrical energy supplied to the motor. If a dynamometer is placed between the motor and the machinery it drives, this will show the amount of mechanical energy delivered, and by comparing the two readings—*i. e.*, the reading of the dynamometer and that of the wattmeter—

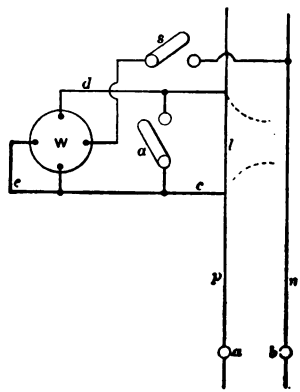


FIG. 140.

the energy lost in the motor can be found, as it will be the difference between the two readings.

This test gives what is called the commercial efficiency of the motor; in other words, it shows how much energy is supplied to the motor and how much energy it gives out. By reversing this test the commercial efficiency of a generator can be found. In this case the wattmeter will show the amount of energy delivered by the generator, and a dynamometer placed between the generator and the driving engine will show the amount of energy supplied by the engine.

## ... XXVI.

### ... THEIR CONNECTION.

... are instruments that register ... electrical energy that has passed ... a given period. They are used ... water meters; they are placed ... measure the amount of electrical ... upon switchboards to show ... e unit of measurement used ... the kilowatt-hour is some- ... The part of the instrument ... s similar to that used in gas ... ock work arranged to move ... ndreds, thousands, ten thou- ... k work is set in motion by a ... ted so as to run at a velocity ... rgy that is passing through it. ... integrating wattmeters on the ... are suited to operate only on an ... instruments used for this service ... the electrical part, than those used ... the motor used in them is of ... motor, and requires no commu- ... a continuous-current motor with- ... ontinuous-current integrating watt- ... those used for alternating-current

... integrating wattmeters the old- ... homson meter. This instrument is ... Thomson recording wattmeter, but ... the fact that it was placed upon the ... true recording instruments.

... h the electrical part of the Thom- ... wn. The part marked *A A* is the ... tor, and the parts marked *m m* are ... orms the armature of a small elec-

tric generator, the field of which is formed by two permanent magnets marked *d d*. In some forms of these instruments there are three field magnets, *d*, but this in no way alters the principle of operation.

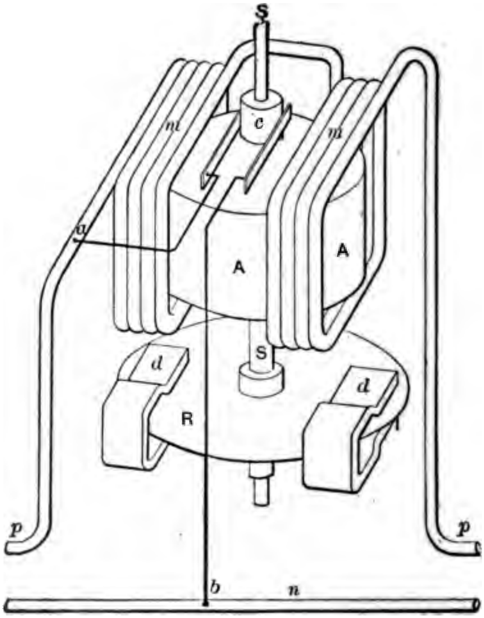


FIG. 141.

As will be seen, the armature *A* is supplied with current through a commutator *c*, the brushes of which are connected with both the line wires *p* and *n*, the conection with *p* being made at *a*, and that with wire *n* at *b*. The field coils *m m* are connected in series in the wire *p*. The armatures *A* of the motor and *R* of the generator are both mounted upon the shaft *S* so that both armatures revolve at the same velocity. On the upper end of the shaft *S* is a small pinion which is geared into the lock work that moves the pointers on the registering dials

The shaft $S$ is mounted so as to run with as little friction as possible and the armature is perfectly balanced, the object being to make the apparatus run with as little effort as is possible.

If the resistance to rotation is so small that the armature will be set in motion by a current of, say, ½ ampere, then with a current of 100 amperes, the velocity would be too great, unless a retarding force is introduced that will increase as the velocity increases. Such a retarding force is provided by the generator at the lower end of shaft $S$. The way in which this acts is as follows: When the armature disk $R$, which is made of copper, revolves, the inductive action of the field magnets $d\,d$ develops electric currents in it. If the velocity of rotation is low, the currents will be weak, but if it is high, the currents will be strong. The power required to rotate $R$ will increase and decrease with the strength of the electric currents generated in it, precisely the same as in any other generator. Thus it will be seen that when $R$ is rotated at a very low velocity, a small effort has to be made by the motor armature $A$ to drive it, but when the velocity is high a great effort must be put forth.

In proportioning the instrument, the motor part and the generator are so adjusted that the velocity of rotation of the shaft $S$ will increase and decrease in direct proportion to the increase and decrease in the power in the circuit; hence, the pointers on the registering dials will move at the right velocity whatever the amount of power may be, provided it is within the range of the instrument.

By comparing the connections in Fig. 141 with those of the indicating wattmeter in the last chapter, it will be seen that they are the same; that is, one set of coils, the field, is connected in series in the circuit whose power is to be measured, and the other coils, the armature $A$, are connected to the opposite sides of the circuit. Thus the force of the field coils increases and decreases with increase and decrease in the strength of the current, and the force of the armature increases and decreases with increase and decrease in the voltage. The principle of operation, therefore, is the same as in the simple indicating wattmeter, the only difference being that in the latter, the movable coil swings through only a small arc of a circle, while in the integrating wattmeter, it is arranged so as to rotate.

Connections for a Thomson wattmeter in a two-wire circuit can be understood from Fig. 141, but it may not be apparent at once, how the instrument is connected in the Edison three-wire system. In a system of the latter kind, if the loads are in actual balance—that is, if there are as many lamps on one side of the neutral wire as on the other—then a meter connected with the field coils in series in either one of the outside wires, and the armature connected between the same wire and the neutral will measure the energy passing through one side of the system, and by doubling this the total energy consumed in the circuit can be obtained.

There are few cases, however, in which the load is per-

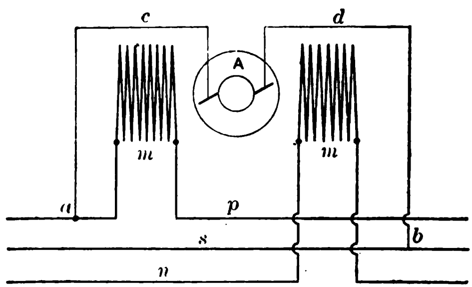


FIG. 142.

fectly balanced and on that account the use of a single instrument connected on one side of the neutral wire will give only an approximate indication of the energy consumed. A more accurate way to connect a single instrument is illustrated in Fig. 142. In this arrangement one of the field coils is connected in one of the side wires, and the other field coil in the other side wire, the armature being connected between the neutral and either one of the side wires. As will be noticed, the armature connects with side wire *p* at *a*, and with the neutral *s* at *b*. The left-hand field coil is connected in series in wire *p* and the right-side field is in series in wire *n*.

This connection gives fairly accurate readings when the difference between the number of lamps on the two sides of the

circuit is not very great, because the field coils will increase and decrease in strength in proportion to the variations in the current in their respective wires, so that their combined effort will be proportional to the sum of the currents in these two wires, which is the total current in the system. The voltage between wire *p* and the neutral will not at all times be the same as that between *n* and the neutral; hence, there will be an error in the indication of the instrument that will be proportional to this difference between the two voltages.

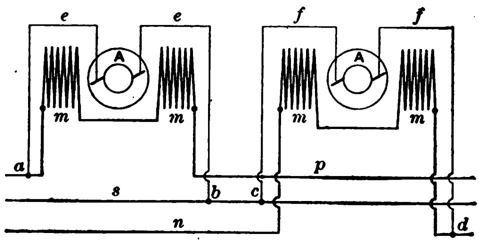


FIG. 143.

Unless there is a considerable difference in the strength of the currents in wires *p* and *n*, the difference in the voltages will not be great; hence, in practice a single wattmeter can be connected as in Fig. 142, where the loads, in both sides of the neutral wire, are fairly well balanced. If it is desired to obtain the most accurate indications, the proper course is to use two instruments, and connect one in each side of the system as is illustrated in Fig. 143. With this arrangement each instrument will register the actual energy that passes on its side of the neutral wire, and by adding the readings of the two meters, the true total is obtained.

204a

# INDEX.

## A.



## B.

## C.

## E.



## F.



## G.



## I.



## K.



## L.

## S.



## T.

V.



W.

# Practical Talks on Electricity

BY WILLIAM BAXTER, JR.

## PART II.

### Care and Management of Dynamos and Motors.

THE ENGINEER PUBLISHING CO.
355 Dearborn St., Chicago.
1905.

## TABLE OF CONTENTS.

# Practical Talks on Electricity.

## PART II.

## CHAPTER XXVII.

### Using a Galvanometer.

GALVANOMETERS are used to detect the presence of electric currents in conductors, and to measure the strength of the current and the voltage; but for the latter purpose they are used only in laboratories, since, for practical measurements, it is more convenient to use instruments designed specially for the purpose. These instruments are the same in the principle of operation as galvanometers, and only differ from them in being so proportioned that the angle through which the indicating pointer moves is proportional to the strength of the current, or the voltage, as the case may be.

If a magnetized needle is held in a north and south position over a wire, it will swing around upon its pivot as soon as an electric current passes through the wire, and the direction in which it will swing will depend upon the direction of the current flowing through the wire, while the angle through which it will swing will depend upon the strength of the current. This action of an electric current upon a magnetized needle is utilized in the construction of a galvanometer, but as the angle through which the needle will be deflected with a weak current is very small for a single wire, the action is multiplied by substituting for the wire a coil having many turns. Each turn acts upon the needle with the same force; therefore, with a coil of one hundred turns, the needle is deflected through as great an angle as it would be with a current of one hundred times the strength passing through a single wire.

For detecting the presence of a current in a conductor, the simplest kind of a galvanometer will answer; such instruments, which are commonly called current detectors, are cheaply made and some of them can be bought for 50 or 75 cents. For making measurements of resistance, it is necessary to have a more accurately constructed instrument. The simplest way in which a galvanometer can be arranged to measure resistance is shown in Fig. 144, but this method is seldom used, except for very high resistances, as it is not accurate.

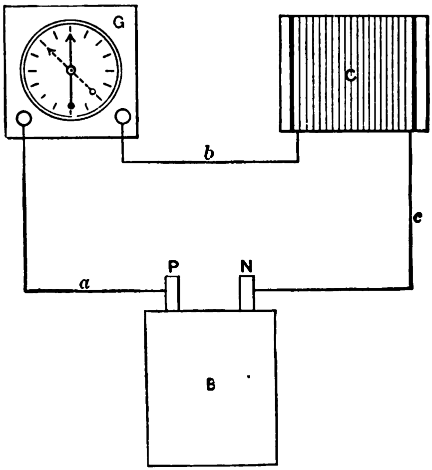


FIG. 144.

In Fig. 144, *G* represents a galvanometer, *B* an electric battery which furnishes the current for making the measurement, and *C*, a spool of wire the resistance of which we wish to ascertain. If the battery *B* is disconnected so that there is no current flowing in the circuit, the needle of the galvanometer will *not be deflected*, but will point toward the north, which in the figure is in the vertical direction. As soon as the battery is *connected*, a current will flow and the galvanometer will be *…ected.*

Suppose it is deflected to the position indicated in the dotted lines; then if we remove spool *C* and substitute for it resistance coils of different sizes, until we get a sufficient number in the circuit to cause the galvanometer needle to be deflected to the same position as with the spool, we know that the resistance in the two cases is the same. If, now, we add up all the resistances we have substituted for *C* and find that they make, say, 10 ohms, we know that the resistance of *C* is 10 ohms.

This method, although simple, is not accurate, for several reasons: First, unless the galvanometer needle is of considerable length, we cannot determine accurately the exact point to which it swings, either with the spool *C* or the measuring resistance we substitute for it. In the second place, unless the current is very weak, the needle will swing through a wide angle and, the farther it swings, the smaller the additional distance it will be advanced by a given increase in current. Thus, if the current is so weak as to cause the needle to swing through an angle of 3 or 4 degrees, doubling the current strength will increase the angle of swing to about double the amount; but if the current is so strong as to cause the needle to deflect 85 degrees, then if the current is doubled, the deflection may not be increased to more than 86 degrees. Thus, it will be seen that, if the current is sufficient to deflect the needle through a considerable angle, the difference in the deflection produced by a small variation in the strength of the current will be so small as to be exceedingly difficult to detect. The third and last of the most serious objections to this method is that, in order to be able to obtain accurate results—supposing that we can determine correctly the deflection of the needle—it is necessary for the voltage of the battery to remain absolutely constant, and it is almost a practical impossibility to make such a battery.

For measuring resistance the method illustrated in Fig. 145 is the one commonly used. It is accurate, and easily understood. In this method, the galvanometer and the resistance coils with which the measurements are made are connected with one another and with a battery that furnishes the current, and the whole outfit is called a Wheatstone bridge testing set, or simply *a bridge, or a testing* set.

*To illustrate the* principle of the Wheatstone bridge, sup

pose the lines in Fig. 145 represent water pipes, and let the point *A* be higher than *C*, so that the current of water will flow from *A* to *C* by the force of gravity. Let *G* be a water meter placed in a pipe running between points *B* and *D*. Now it is evident that if *B* and *D* are on the same level, no water will pass through *G*, and consequently the indicator hand will not move; but if *D* is higher than *B*, there will be a current of water through *G* from *D* to *B*, and, if *B* is higher than *D*, the current will

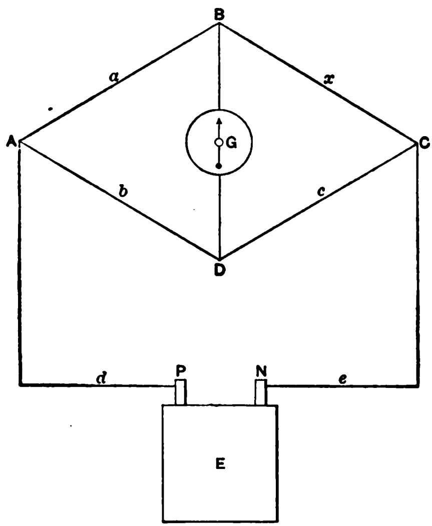


FIG. 145.

flow in the opposite direction. Thus it will be seen that we can determine whether *B* and *D* are on the same level by noticing whether the meter *G* indicates a current or not. If the two pipes *A B C* and *A D C* have a uniform inclination, the distance from *A* to *B* will be the same as that from *A* to *D*; but if the upper pipe has a steep decline near *A* and then runs comparatively level, the distance *A B* will be shorter than A D.

This principle, as above illustrated in connection with water pipes, is that of the Wheatstone bridge, but instead of makin

use of differences in level, we make use of differences in electrical pressure, or potential, as it is called. To force an electric current from *A* to *C* requires an amount of pressure that is proportional to the resistance and the strength of the current. To force the current from *A* to *B* requires less pressure; hence, we may say that the fall of potential between *A* and *C* is greater than between *A* and *B*. Suppose the resistance between *A* and *D* is 10 ohms, and between *D* and *C* also 10 ohms; then, if the voltage acting to force the current from *A* to *C* is 20 volts, the current will be 1 ampere, and as the resistance from *A* to *D* is 10 ohms, the fall of potential between *A* and *D* will be 10 volts.

Now let the resistance from *A* to *B* be 20 ohms and from *B* to *C* also 20 ohms; then the total resistance from *A* to *C* through *a* and *x* will be 40 ohms, and as the pressure acting between these points is 20 volts, the current will be ½ ampere. Now, ½ × 20,—*i. e.*, current in *a* times the resistance of *a*—is equal to 10 volts. Hence the fall of potential from *A* to *B* is 10 volts, and this is the fall of potential from *A* to *D*, so the electrical pressure at *B* and *D* is the same, and as a consequence no current will flow through the wire and the galvanometer *G*.

From the foregoing it will be seen that, if we connect between the points *B* and *C* the conductor whose resistance we desire to measure, and then insert between *A* and *B* resistance measuring coils until no current flows through the galvanometer *G*, then the resistance at *x* and the resistance of the measuring coils at *a* will be equal. With this method, very accurate results can be obtained, as the smallest possible current passing through a sensitive galvanometer at *G* will cause the needle to deflect through a noticeable angle. Hence, we can determine with extreme accuracy the condition when the resistance *x* and the measuring coils *a* just balance each other.

In order that the instrument may have a wide range of measurement, the resistances of the branches *b* and *c* are made so as to be varied. To illustrate the effect of such variations, suppose that *b* is made 100 ohms, and *c* is 1 ohm. Then the total resistance from *A* to *C* through the lower sides of the figure will be 101 ohms; and if we have an electromotive force of 101 volts, the strength will be 1 ampere, so that the fall of potential between *A* and *D* will be 100 volts. Now suppose we place a

conductor in the side, *x*—that is, connected between *B* and *C*—and suppose that to obtain a balance so that no current flows through the galvanometer, we have to insert at *a* 10 ohms. Then we shall know that the resistance of the conductor at *x* is 0.1 ohm; or by adding this 0.1 to the 10 ohms at *a*, we shall have a total resistance from *A* to *C*, through *a* and *x*, of 10.1 ohms, and as the voltage between these points is 101, the current strength will be 10 amperes, and this multiplied by the resistance of 10 ohms, at *a*, gives just 100 volts, which is the same fall of potential as we found between *A* and *D*. Thus it will be seen that if the resistance of *b* is made 100 times as great as that of *c*, the resistance *a* will be 100 times as great as the resistance *x*, which we desire to measure. If we reverse the order of things, and make *c* 100 times as great as *b*, then the resistance at *x* will be 100 times as great as the measuring resistance at *a*.

Testing sets for general use are arranged so that the resistances of *b* and *c* can be made equal, or *b* can be made 100 times as great as *c*, or *c* 100 times as great as *b*. By means of these changes, the capacity of the instrument is made 10,000 times as great as that of the measuring coils, and the smallest resistance that can be measured is the one-hundredth part of the lowest of the measuring resistances. The lowest of the measuring resistances is generally 0.1 ohm; so that the smallest resistance that can be measured at *x* with the instrument, is 0.001 ohm. The sum of all the resistance coils of the instrument is generally 11,000 ohms; so that the largest resistance that can be measured is one million, one hundred thousand ohms.

Special bridges are made that have a greater range, and some are graduated for much smaller resistances, but with the same total range.

Fig. 146 shows a Wheatstone bridge testing outfit. The battery is placed in the right-hand side of the box, the galvanometer is at the back and the measuring resistances are connected with the rows of discs in front of the galvanometer. The conductor to be measured is connected with the binding posts on the left-hand side of the box.

In making a test, after the conductor is connected with the binding posts, the switch key at the front is depressed, closing the circuit, and instantly the galvanometer needle is seen to

swing violently to one side. We now set the plugs in holes so as to connect some of the measuring resistances in the circuit, and again depress the switch key. If the needle now swings to the opposite side, we know that we have inserted too much resistance and proceed to cut some of it out, by changing the

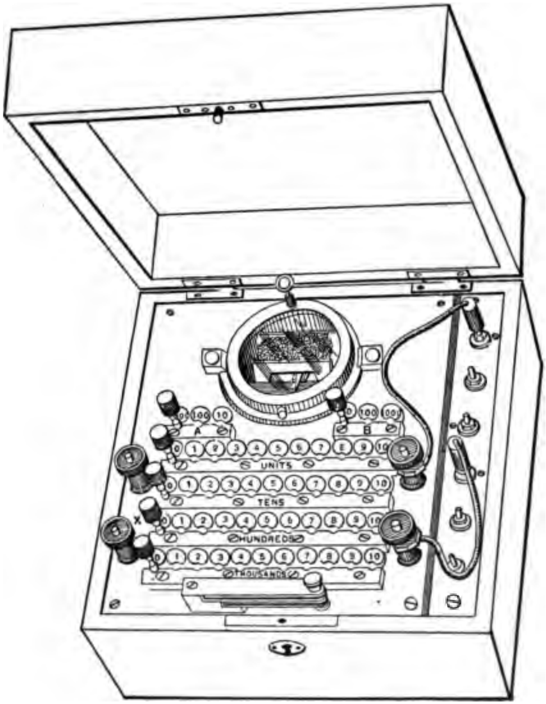


FIG. 146.

position of the plugs. When we get very near to a balance, the needle will swing more slowly out of the central position, and when a perfect balance is obtained, it will not move at all when *we depress the key.*

*Having reached* this point, we add up all the resistance

inserted in the circuit and then, by noting whether the resistances *b* and *c* are equal or not, we know whether this sum is the true resistance of the object we are measuring, or whether it is to be divided or multiplied by ten or one hundred. It will be noticed that next to the galvanometer, there are three plug holes on each side, one marked *A* and the other *B*. These are the *b* and *c* resistances of Fig. 145, and the figures on the disks state whether, with the plugs in certain holes, the reading is to be taken even, or whether it is to be multiplied or divided.

# CHAPTER XXVIII.

## Care of Electrical Machines.

AFTER an electrical generator or motor has been in use for several years it is liable, like other machines, sometimes to act badly. It will be examined, and sometimes a correct conclusion is reached, but very often not.

If a machine is old, it is more than likely that the shaft will be found out of center, and if this fact is discovered at a time when things are not working as they should, it is taken for granted that this is the cause of the trouble. For the present it will be sufficient to investigate just what effect displacement of

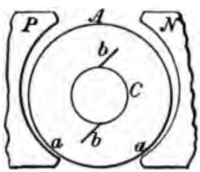


FIG. 147.

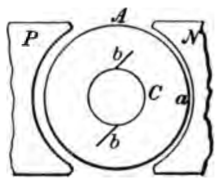


FIG. 148.

the shaft can have; then, if the trouble with a machine so afflicted is not in the category of shaft disorders, we shall know that we must seek further for the cause of the complaint.

Fig. 147 illustrates an armature of a two-pole machine which is out of center in one direction, and Fig. 148 shows another two-pole armature out of center in a direction at right angles to that shown in the first figure. The condition shown in Fig. 147 could be produced by a heavy armature running in rather light bearings for several years, and the side displacement of Fig. 148 could be produced by the tension of an extra tight belt. The mechanical effect of both these conditions would be to increase the pressure on the bearings, as the part *a* of the armature would be drawn toward the poles of the field with greater force *than the opposite side.* The downward pull due to the attrac*tion of the magnetism,* would be greater in Fig. 147 than the

side pull in Fig. 148, supposing both armatures and fields to be the same in both cases, and the displacement of the shafts equal. This difference is due to the fact that in Fig. 147 the magnetism of both poles is concentrated at the lower corners on account of the shorter air gap. Hence, both poles pull much harder on the lower side.

In Fig. 148, the pull of the *N* pole is greater than that of the other, simply because in the latter the magnetism is more dispersed, but the difference in the density on the two sides will not be very great. If the bearings of a machine, with the armature displaced as indicated, have shown any signs of cutting, or if they run unusually warm, their condition will be improved by putting in new bearings that will bring the shaft central.

If the armature is of the drum type, the displacement of the shaft will have no effect upon it, electrically. This is owing to the fact that all the armature coils are wound from one side of the core to the other, and, therefore, at all times every coil has one side under the influence of one pole and the other side under the influence of the opposite pole, and if one side is acted upon strongly by one pole, it will be acted upon feebly by the other.

If the armature is of the ring type, then the displacement of the shaft will affect it electrically, for in a ring armature the coils on one side are acted upon by the pole on that side only and as the magnetic field from one pole will be stronger than that from the other (that is, considering the action upon equal halves of the armature), the voltage developed in the coils on one side of the armature will be greater than that developed on the other side.

In Fig. 147, if the brushes *b b* could be placed on the vertical diameter, as shown, the electrical action would not be interfered with, for on each side of the vertical line the magnetic action would be the same. But the reaction of the magnetism developed by the armature current twists the magnetism around, so that the brushes have to be rotated around some distance from the vertical line; therefore, even in the case of Fig. 147 the electrical balance will be disturbed, if the armature is of the ring type.

The effect of this disturbance of the electrical balance will

be that the brushes will spark badly, because the voltage of the current generated on one side of the armature will be greater than that of the current on the other side. Hence, when these two currents meet at the brushes, the strong one will tend to drive the weak one backward. If, while the armature is out of center, we wish to adjust the brushes so as to get rid of the excessive sparking, all we have to do is to set them to the right of the center line in Fig. 148, so that the wire on the left side will cover a greater portion of the circumference than that on the right; or, what is the same thing, so that there will be more commutator segments between the brushes on the left side than on the right. In this way the voltages of the two armature currents can be equalized, and the sparking can be cured, or very nearly so.

In a multipolar machine, the displacement of the armature will have the same effect mechanically as in the two-pole type; that is, it will increase the pressure on the bearings and probably cause them to cut, or at least to run warmer than they should.

The effect produced upon the electrical action will depend upon the way in which the armature is wound, or, more properly speaking, upon the way in which the armature coils are connected with each other and with the commutator segments. Multipolar armatures are connected in two different ways, one of which is called the wave or series winding, and the other the lap, or parallel winding. (See Chapters XI and XII, Part I.)

In the first named type of winding, the ends of all the coils on the armature are connected with each other and with the commutator segments in such a manner that there are only two paths through the wire for the current; therefore, these two armature currents pass under all the poles and the voltage of each current is due to the combined effect of all the poles. From this very fact it can be clearly seen that it makes no difference what the distance between the several poles and armature may be, for if some are nearer than the others, the only effect will be that these poles will not develop their share of the total voltage, but whatever their action may be, it will be the same on the coils in both circuits.

When a multipolar armature is connected so as to form a

parallel or lap winding, the connections between the coil ends, and between these ends and the commutator segments, are such that as many paths are provided for the current as there are poles, and each one of these paths is located under one pole so that the voltage developed in it is proportional to the action of this pole. The diagram Fig. 149 illustrates a six-pole armature with the ends of the field poles, and the arrows *a a*, *b b*, *c c*, indicate the six separate divisions of the coils in which the branch currents are developed.

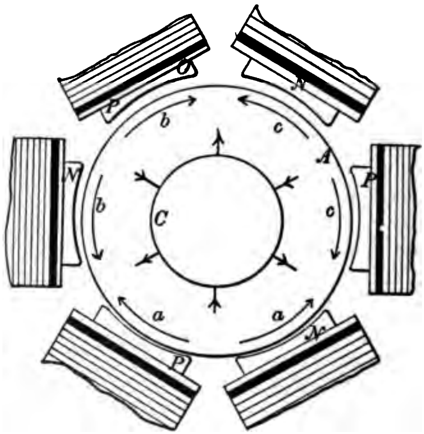


FIG. 149.

Now it can be clearly seen that as the armature is nearer to the lowest poles than to any of the others, the action of these will be the strongest. Hence, the currents *a a* will be stronger than the others and will have a higher voltage. These two currents will be taken off the commutator by the brushes at the lower corners. These same brushes also take off the currents developed by the action of the side poles, and which are indicated by the side arrows b c. These last two currents will be weaker and of lower voltage than the a a currents; hence, the latter will try to crowd them back and thus sparks will be [illegible]uced at these brushes.

The two upper currents are weaker than the side ones, and their voltage is also lower, so that the current returning to the commutator through the brushes at the upper corners will not divide equally, but the larger portion will be drawn into the coils on the side; and as the upper coils will have to fight to hold their own, so to speak, there will be a disturbance of the balance that is required for smooth running. The result will be heavy sparking at these brushes.

If these four brushes were shifted downward, the lower ones being moved more than the upper ones, points could be found where the sparking would disappear. This readjustment of the brushes would be the same thing for a multipolar machine as the shifting to one side explained in connection with the action of a two-pole ring-wound armature. Multipolar machines, however, are seldom made so that the brushes can be moved individually, so that we cannot count on correcting the trouble temporarily in this way. In the great majority of cases, if the brushes of a multipolar machine spark on account of the armature being out of center, the only cure is to reset the bearings, if they are adjustable, and, if they are not, to put in new ones.

In two-pole machines we have seen that, if the armature is of the drum type, the action of the brushes will not be affected by the displacement of the shaft, and this will also be the case in a multipolar machine, if the armature is wave or series wound. From this it will be inferred that there is a similarity between the two-pole drum winding and the multipolar wave winding, and such is really the case. The multipolar lap winding is the counterpart of the two-pole ring winding, and, in fact, a ring-wound armature will work perfectly in a machine with any number of poles, provided we place upon the commutator as many brushes as there are poles.

If we made a ring armature and provided a number of different fields into which it would fit properly, one being two-pole, one four-pole, one six-pole, one eight-pole, and the others of greater numbers of poles; then, if each machine had as many brushes as poles, and these were set in the proper position, the armature would *run as well in* one as in another, without re-*quiring any changes in the* connections between the armature

coils and the commutator. In fact, all we should have to do would be to remove it from one machine and place it in another and it would be ready to run.

For multipolar machines the regular ring winding is not often used, because the coils have to be wound in place, and are, therefore, not so mechanical in appearance, and are more expensive to make. The formed coils almost universally used for multipolar armatures have both sides on the outer surface of the core, and on that account, when they are connected into a lap winding, they will not operate perfectly with a number of poles different from that for which they are connected, but they will run, after a fashion, with any number of poles. That is, if we have two generators with four and six poles respectively, both using armatures of the same diameter, and both lap wound, if one armature gives out, we can use the armature of the other machine as a makeshift. An armature with a wave winding cannot be used except with a field of the number of poles for which it is wound.

As it may sometimes be advantageous to change an armature from one machine to another while repairs are being made, provided the dimensions of the machines are the same, it is desirable to know how to determine whether the winding is wave or lap connected. This is explained in Chapter XIII, Part I.

# CHAPTER XXIX.

## MANAGEMENT OF GENERATORS.

ELECTRICAL generators are made of two types so as to develop two different types of currents. One of these maintains a constant voltage and the other a constant amperage. With the first-named type, the amperes increase and decrease in accordance with the demands of the circuit, and in the second type the volts change in the same way. It must not be supposed that these two types of current represent different kinds of electricity. The difference between the two types is precisely the same as the difference between two streams of water, one of which keeps the pressure constant, and increases or decreases in volume, while the other keeps the volume constant and varies the pressure.

Electric generators that maintain the amperes constant are called constant current generators, and those that keep the volts constant are called constant potential generators. Machines of the first-named type are used for arc lighting, while those of the second type are used for incandescent lighting, for operating stationary motors and electric elevators, and also for electric railways. In the early days of the electrical industry, electric generators were called dynamos and the name is still used by the majority of people to designate arc light machines. The number of arc light generators used outside of lighting stations is very small in comparison with the number of constant potential generators, probably not more than 1 per cent of the latter. On this account, what we have to say in this chapter will refer to the constant potential machines.

Constant potential machines are of three different types, so far as the current is concerned. The simplest type is the shunt machine, which does not maintain the voltage absolutely constant, but suffers a slight reduction as the strength of the current increases. A well proportioned shunt generator will not vary its voltage more than 2 or 3 per cent from full load down to the lightest load, provided the speed at which it runs does not change. If the capacity of the generator is, say, 500 lamps, and it develops

110 volts with the full number of lights in operation, it will develop not more than 112 to 113 volts when only one lamp is burning.

This would be the result if the speed did not change; but as a matter of fact, the speed will change, because the best governed engines will run slightly faster with a light load than with a heavy one. A well governed engine will increase its velocity between 3 and 5 per cent between no load and full load, and this change in speed will cause the voltage of the generator to vary more than stated above. Hence, in actual practice, a well proportioned shunt generator driven by a well designed engine will vary its voltage from 6 to 9 per cent between full and light load, so that if, with all the lights burning. the voltage is 110, with only one lamp in service, it will be anywhere from 116 to 119 volts.

In practice, however, the number of lights does not vary within such wide limits, the fluctuation being, as a rule, probably not more than one-half as much, so that the actual variation in voltage is seldom more than 2 or 3 volts. This, however, is the variation of the pressure at the terminals of the machine; but if the lamps are located at a considerable distance from it, the fluctuation to which they will be subjected will be greater, because the portion of the voltage absorbed by the resistance of the line wires will increase as the current increases, and decrease with current decrease.

The only way in which these changes in voltage can be compensated for with a shunt generator is by varying the amount of rheostat resistance introduced into the field coil circuit. Many devices have been made that change this resistance automatically and some of them are simple and work well. If the number of lights in use is continually varying, the only way in which the voltage can be kept constant is by the use of one of these automatic regulators; but if the number of lights remains constant for a considerable length of time, and the increase or decrease takes place at more or less regular intervals, then the field rheostat can be changed by hand and the results obtained will be very satisfactory.

The principle upon which a field rheostat acts can be explained by the aid of Fig. 150 and then the way in which it

should be manipulated to vary the voltage in any desired degree will be readily understood. In this diagram, the circle *A* represents the generator armature, and *M* represents the field coils, while *R* is the rheostat. The bar *C* together with the contacts above it, which are connected with the several loops of the rheostat, and the lever *D*, constitute the rheostat switch, by means of which the resistance is cut into or out of the field circuit. The lines *P* and *N* represent the line wires through which the

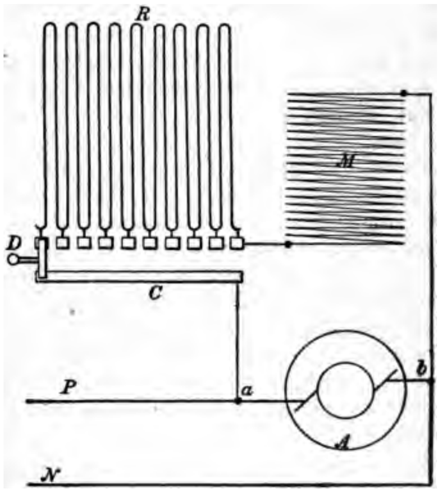


FIG. 150.

current passes to the lamps. The points *a* and *b* represent the binding posts of the generator. From post *a*, a connection runs to bar *C*, and with the lever *D* in the position shown, the current that traverses the field coils *M* will also have to pass through all the resistance of *R*.

Under these conditions the field current will be weak, and as a result the field magnetism will also be weak. Now the voltage developed in the armature at a given speed of rotation, will depend upon the strength of the field magnetism, being low when the latter is weak, and high when the latter is strong

From this it will be seen that when the field current traverses all the resistance of *R*, the voltage will be the lowest obtainable at the speed at which the generator is run, and that with all the resistance of *R* cut out of the field circuit, the voltage will be the highest. The movement of *D* toward the right cuts out the sections of *R* consecutively, all of the resistance being removed from the field circuit when *D* rests on the last contact on the right-hand side. Any voltage between the highest and lowest can be obtained by placing *D* at points between the extreme right and left positions.

Suppose a generator of five hundred lights capacity is used in a building in which about one-fifth of the lamps are in service during the day, and say four to five hundred at night from 6 to 10 o'clock, after which hour the number drops off to about twenty, at which it remains until the next morning. In such a building, there would be two periods during the whole day when the rheostat would have to be manipulated to keep the lamps burning at the normal brilliancy. These periods would be when the night load begins, and when it drops off. From midnight, to about 6 o'clock the next evening, the number of lights would range between about twenty and, say, sixty; so that, if the rheostat is set at midnight, when the small number of lights are in use, to about ½ volt above the normal pressure, it will be right for the day load, as increasing the lamps to sixty will not reduce the voltage too much.

At the hour when the night load is about to commence, the attendant should keep his eye on the voltmeter and as fast as the pressure drops, the rheostat switch should be turned, so as to cut out the resistance and thus raise the voltage again to the standard point. In the course of half an hour or so, all the lights will be turned on, and the rheostat will not have to be looked after again until the time comes when the lights begin to be turned off. During this period, the voltage will rise as the lamps go out, and to keep it down to the standard, lever *D* will have to be moved toward the left, so as to cut more resistance into the circuit.

Field rheostats as actually used are not of the form illustrated in Fig. 150, but they are connected in the field circuit in the way shown, and their action is as explained. Most rheostats

are made in the shape of a box, and vary from a foot square to two or three times this size. The switch part is located on the front of the box and is arranged in the manner shown in Fig. 151. The stud *C* takes the place of rod *C* in Fig. 150, and the switch *D* is the counterpart of *D* in the first diagram. The circle of contacts *E* are connected with the sections of the resistance in the same way as the contacts in the straight row above *D* in Fig. 150. At the ends of the circle of contacts, stops *a* and *b* are placed so as to prevent the switch from being moved entirely off the contact, and thus opening the field circuit.

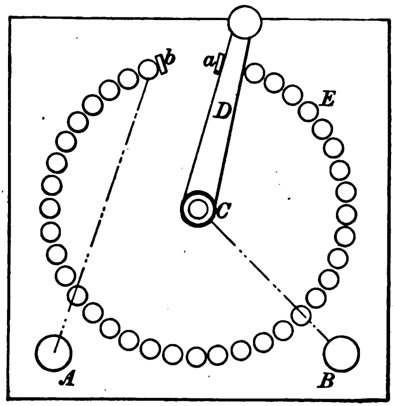


FIG. 151.

If the field circuit is opened from any cause, the machine will stop generating; therefore, it is necessary not only to provide these stops, but also to make all parts of the switch so perfect, mechanically, as to render defective contacts at any point next to impossible. It may also be well to add that all the connections in the field circuit, whether in the rheostat or elsewhere, must be carefully watched and not be allowed to get loose. A slightly imperfect joint in the field circuit may not stop the generation of current entirely, but it will lower the voltage, and if it is in such a condition that the contact becomes good

and bad by turns, the voltage will rise and fall, thus causing the lights to vary in brightness. A loose wire in a binding post, if so supported that it can swing or vibrate, may cause the voltage to dance up and down in such a manner as to lead to the conclusion that something serious has happened to the generator.

If the current developed by a generator is supplied to lamps that are near by, say within 100 feet, a shunt machine will meet the requirements perfectly; but if some lamps are within this distance while others are 500 or 600 feet away, a compound generator will give better satisfaction.

As we have seen, the shunt machine can be made to keep the voltage about constant at its terminals by the aid of the field rheostat, but the voltage at the lamps under these conditions will not be constant, owing to the fact that a part of it is absorbed in overcoming the resistance of the line wires. Now suppose that at a distance of, say, 500 feet from the generator there are two hundred lamps to be operated and that of these there will be only twenty or thirty in use during a portion of the time, while during the remainder of the day all the lamps are in use. Under these conditions, the voltage lost in driving the current through the line when all the lamps are used will be greater than when the number is small; hence, if the pressure is right when all the lights are in service, it will be too great when only a few are burning.

If a compound wound generator is used, the voltage can be kept the same when the number of lights burning is large or small, because such a machine can be adjusted so that as the current generated increases, the voltage increases, and if this increase is just equal to the greater loss in the line, then at the distant lamps the pressure will remain the same at all times. At the nearby lamps, however, the voltage will rise as the number of lights in service increases. In order to obtain the best results in such cases, the machine is so proportioned that the lamps about midway between the farthest and the nearest will have the same voltage at all times, and then the nearby ones will have slightly too great a voltage when the load is heavy, while the distant ones will not have quite enough, but the variation in pressure at any of the lamps will not be sufficient to make a noticeable difference in the brightness of the light.

When a machine is adjusted so that the voltage at the terminals increases as the current increases, it is said to be overcompounded, a compound-wound machine being one which maintains the voltage constant at the terminals. To make a generator compound or overcompound, the field is provided with two sets of coils, one being made of many turns of fine wire and the other of a few turns of large wire. The first set is the shunt coils, and the second is the series or compounding coils. The current through the shunt coils is derived from the terminals in the same way as in a simple shunt machine, but the current for the series coils is the entire current of the armature; that is, the armature current does not pass out directly to the external circuit, but first passes through the series field coils.

Upon the strength of current flowing through them depends the magnetizing action of these series coils. Therefore, when the armature is generating a large current the series coils act more energetically upon the field. Thus it will be seen that the office of the series or compounding coils is to assist the shunt coils and we can further see that, if a certain number of turns of wire in these coils will enable them to assist the shunt coils sufficiently to keep the voltage just constant, then a greater number of turns will so increase the assistance they give as to cause the voltage to rise as the current increases. The difference, therefore, between a compound and an overcompound generator is simply that the latter has more turns of wire in the series coils.

## CHAPTER XXX.

### How to Find Out Whether Two Generators Can Be Run in Parallel.

IT IS OFTEN desirable to determine whether two generators can be connected in parallel; that is, whether they can be connected so as to feed into the same circuit. One who does not understand the subject would be likely to take it for granted that, if they are of the same size, or nearly so, they will work all right, but that, if one is much larger than the other, they will not. This conclusion, however, is far from being correct; in fact, the size has little, if anything, to do with the matter.

For two generators to run together in the same circuit, all that is necessary is that they both develop the same voltage. The action of two electric generators working on the same circuit is the same as that of two pumps delivering water into the same pressure tank. If one pump has a cylinder 2 inches in diameter, and the other one is 2 feet, they will work in perfect harmony and each one will do its share of the pumping, if both develop the same pressure. If, however, the small pump, when running at its normal speed, can develop a pressure of 100 pounds, and the large one can only work up to 90 pounds, then the small one will run above its velocity until its pressure drops to the same point as that of the large one, and it will do a great deal more than its proportion of the work.

Between two pumps and two generators the comparison is not perfect, because the two pumps will work at practically a constant output, while the two generators will have to vary the work they do, probably two or three to one. If the two pumps were arranged so that their combined work would range from, say, 200 gallons to 1,000 a minute, they would furnish an exact parallel to the two generators. Now, if the amount of water delivered by the pumps was to be varied without changing the speed, then the capacity could be varied by changing the stroke 'e pistons. This could be accomplished by having the crank-

pins arranged so that they could be moved in or out from the center.

With such an arrangement, it is evident that it would be possible for the devices by means of which the cranks are moved to be so proportioned that the stroke of both pumps would be changed alike, and on the other hand they could be so proportioned that the strokes would not change alike. If as the amount of water pumped varied, the strokes of the two pumps were changed by corresponding amounts, then, if the pressures of the two were the same for one stroke, they would be the same for all strokes. On the other hand, if the strokes are not changed by corresponding amounts, then the pressure of the two pumps would be the same for a certain length of stroke, but for all other lengths it would not, and as a consequence, there would be only one rate of pumping at which the two machines would operate properly. Above or below this point one pump would do more than its share of the work. If the small one did more for large outputs, the large one would do more for the smaller outputs.

All the foregoing is true with respect to two generators; that is, if they are to work together on a variable load, they must be able to develop the same pressure for corresponding increases or decreases in the strength of the current. This fact we can illustrate more clearly by the aid of Figs. 152 and 153. Suppose we have two generators, which, for the sake of simplicity, we will assume to be of the same capacity. Suppose that one of them develops a voltage of 112 when the current is practically zero. When the current delivered is 20 amperes, suppose the voltage is 111 and at 35 amperes let it be 110, while at the maximum output of 80 amperes it is 105 volts.

If such is the performance of the machine, we can represent it by a curve such as *A* in Fig. 152. In this diagram, the vertical lines measure off the amperes, and the horizontal lines the volts. The vertical line to the left represents zero amperes, and the top horizontal line represents 112 volts. Now, in the foregoing we have assumed that when the current is practically zero, the voltage is 112. Hence the curve *A* must start from the point *where the zero ampere* line and the 112-volt line intersect, and *this is the starting point* in the diagram.

We have further assumed that when the current is 20 amperes, the voltage is 111, and by looking at the diagram we shall find that the vertical line 20 and the horizontal line 111 meet the curve at the same point. In the same way the vertical line 35, and the horizontal 110 meet at another point of curve *A*. The curve *A* is called the characteristic curve of the generator, and from examining it we can see at once the relation between the change in strength of current and voltage.

Let us suppose now that we had another generator of the same size as the one which gave the curve *A*, and that curve *B* is the characteristic of this second machine. By comparing

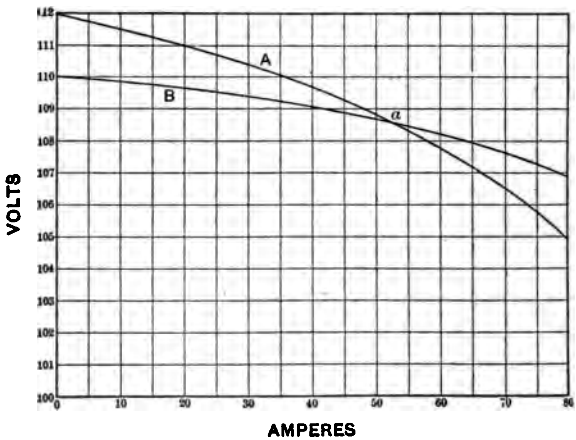


FIG. 152.

these two curves, we find that the rate at which the voltage changes in the two generators is not the same, for that of machine *A* drops 1 volt by the time the current reaches 20 amperes, while machine *B* does not lose 1 volt until the current is a trifle more than 40 amperes. Thus the *B* machine keeps up a more *even voltage* than the other. The two curves cross each other *at the point a*, and from this we see that, if we could keep the *current* constant at about 105 amperes, so that each machine *would* have to develop 52.5 amperes, the two generators would

work together in a satisfactory manner; but if the current increased beyond this amount, machine *B* would do more than *A*, while for a decrease in current *A* would do the more work.

Suppose that the characteristic curves of the two generators were as represented in Fig. 153, then for all strengths of current, *A* would develop a voltage that would be about the same amount higher than that of *B*. From this fact we would at once infer that, if we increase the speed of *B* sufficiently to enable it to give the same voltage at, say, 10 amperes, as machine *A*,

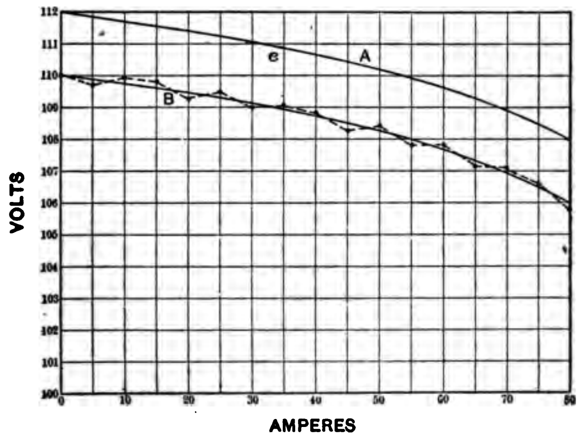


FIG. 153.

it would give the same voltage as the latter with any other strength of current. Hence, these two generators would work together with a varying current and at all times each one would do its proper share of the work.

By the foregoing process we can determine whether two generators of the same capacity will work well together, and by the same means we can determine whether machines of widely *different capacities* can work together. To accomplish *the latter result, all* we have to do is to draw the characteristic *curves to different* scales, so far as the amperes are concerned.

To illustrate this point more clearly, suppose that machine *B* works up to only 40 amperes, then if we draw its characteristic with the same scale for the amperes as we use for machine *A*, the curve would be only one-half the length of curve *A*, and we could not tell from looking at the two whether they would agree or not.

If, however, we were to use a scale twice as great for the amperes of the small machine, then its characteristic curve would be the same length as that of *A*. Thus it will be seen that the curve *B* can be the characteristic of a machine that gives a maximum current of 40 amperes, provided we take the divisions on the horizontal, ampere scale, to indicate 2½ amperes instead of 5. We can further make *B* the characteristic of a 20-ampere machine by making the divisions of the horizontal scale measure 1¼ amperes. Thus it will be seen that to compare the characteristic curves of generators of different capacities, all we have to do is to so proportion the scales for the amperes that both curves will be of the same length.

It will be noticed that in these diagrams, the vertical scale, which measures the volts, runs from 100 up, instead of from zero. We do this so as to represent the volts on a larger scale and thus cause the curves to drop faster. If we used the same scale as for the amperes, 5 volts to a division, the curves would run so nearly parallel with the horizontal lines that we could not determine the volts as accurately as with the larger scale.

It may be said that, although the foregoing explanation of the way in which we determine whether two generators will run together, is simple enough, it is of no value except to those who know how to obtain the characteristic curves of the machines. This is very true, but it is a simple matter to obtain the characteristics, as will be presently shown. Testing of every kind is simply the art of measuring, and if you have the proper instruments, and know how, it requires but little more ability to make a test of an electric generator and obtain its characteristic, than to weigh a pound of cheese or measure a piece of steam pipe. The writer has seen many apprentice boys, 16 to 18 years old, who could obtain these curves as accurately as any one.

The course of procedure is as follows: Obtain an ammeter of sufficient capacity to measure the maximum current of the

machine, and also a voltmeter of proper capacity. Arrange a sufficient number of lamps or resistance coils to carry the full current. The generator should be driven by an engine that runs with as little variation in speed as possible.

Connect the voltmeter with the terminals, and the ammeter in the main line, so as to measure the total current generated at any time. Obtain a speed counter so as to get the speed of the armature when the instruments are read. Rule a sheet of paper in the same manner as Figs. 152 and 153, so as to mark on it the readings as obtained. Having done all this, you first start the generator and obtain the voltage of the machine with the main line open, that is, with zero current. Make a dot on the zero ampere line, on the ruled paper, at a point which indicates the volts shown by the voltmeter. At the same time that the volts are read, take the speed of the armature, and make a note of it.

Now cut in lamps until the current rises to 5 amperes, and again take the voltmeter reading, and the speed. Mark this reading on the 5-ampere line, and then cut in more lamps so as to increase the current to 10 amperes. With this current read the voltmeter and the speed again and mark the result on the 10-ampere line. Proceed in this way until the current has been increased to the maximum amount, and you will find that the result is a number of dots, as shown on both sides of curve *B* in Fig. 153. By connecting these points you will get a zigzag line.

This line will not show the true relation between the volts and the amperes, for, if it did, it would indicate that the action of the machine is very irregular. A curve drawn through these points, so as to strike a general average, will be the actual relation between volts and amperes. The irregularity in the actual measurements is due to the difference in the speed of the armature at the instants when the readings are taken, and also to the fact that as the pointers of the instruments vibrate, to some extent, it is not possible to get the exact results. To make as accurate a test of a machine as possible requires three men, one to read the volts, one for the amperes and one for the *speed. In this* way, by working at a given signal, all *the readings can be taken* very nearly at the same instant.

# CHAPTER XXXI.

## Connecting Generators in Parallel.

When two or more generators are connected with a switchboard so as to feed into the same circuit, it is necessary to start and stop them in a certain way in order to avoid trouble; and, while in operation, several points have to be looked after to secure satisfactory results and also to prevent accidents. What has to be done depends to some extent upon the type of machines—that is, whether they are shunt or compound wound.

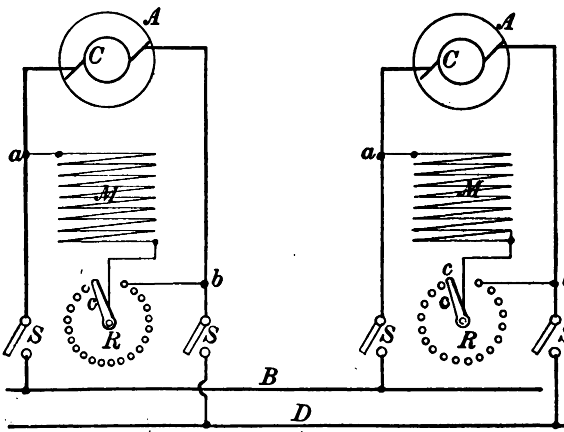


FIG. 154.

Fig. 154 is a diagramatic illustration of two shunt-wound generators connected with the same distributing mains. The lines *B D* represent the bus bars located at the back of the switchboard, and these are in reality nothing but the ends of the distributing mains through which the external circuit is supplied. The two generators are connected with these bus bars by means of the switches *S*, and, as will be noticed, all these switches are

open so that both machines are entirely disconnected from the circuit. This is the way they should be when the generators are not running.

To start up, the machines are set in motion, without turning the *S* switches, and as can be seen, under these conditions the only path for the current generated in the armatures *A A* is through the field coils, each machine having its own field coil as a circuit. When the generators are running at full speed, the rheostat of one of them is adjusted so that the voltmeter indicates the proper voltage. This having been done, the two switches *S S* are closed so as to connect the generator with the buses *B D,* and thus with the external circuit.

We now turn our attention to the second generator, and adjust its rheostat so that the voltage is a trifle higher than that of the first machine, say 1 volt more. Having done this, we close the *S S* switches so as to connect the second machine with the circuit. The next point to observe is the amount of current delivered by each generator, which should be its proportion of the load. Thus, if both machines are of the same size, both should develop equal amounts of current. If one machine is twice as large as the other, then the currents should be in the ratio of two to one. To be able to read the currents of both generators without trouble, there should be provided on the switchboard two ammeters, one for each machine.

If one machine is found to be delivering more than its share of the current, which is likely to be the case, it will show that its voltage is slightly too high, and to adjust it to the proper point all we have to do is to turn the field rheostat *R* so as to cut in a little more resistance. It is probable that when the second generator is cut into the circuit, the adjustment of the voltages will be imperfect, for the reason that the voltage of the machine already in circuit is that which corresponds to the strength of current it is delivering, while the voltage of the second generator is that corresponding to a zero current. Now the voltage will drop as the current increases, and will rise as the current decreases; hence, when the second machine is cut in, the voltage of the first one will increase, for now there are two machines to develop the *same current*; therefore, the current in the first one *will be reduced, thus* causing its voltage to rise.

While the voltage of the first generator will increase, that of the second one will drop, because the current generated by it will increase. We stated above, that the second machine is adjusted so that its voltage is slightly higher than that of the first one, before it is cut into the circuit, and as can now be understood, we make it a little higher so as to compensate for the rise in the voltage of the first generator, as well as the drop in that of the second. In making this allowance, however, we have to use our judgment as to what it should be and it is not likely that we shall hit the nail exactly on the head every time; so, in the majority of cases, we have to make a second adjustment after the two machines are connected with the circuit.

When the generators are stopped, both must be cut out of the circuit, for if they are left connected, trouble may result when the next start is made. In addition to this it is not safe to stop the machines without cutting them out of the circuit, even if both are run by the same engine. If we desire to stop one of the generators, the only proper course is to open the switches *S S* before the engine is stopped. If this is not done, as soon as the speed of the generator that is being stopped reduces a trifle below the normal, its voltage will be so far reduced that current from the other generator will run back through it, and thus drive it as a motor.

This is also the reason why it is necessary to disconnect both machines when they are stopped; for if they are left connected, then in starting up the next time one machine may pick up its voltage sooner than the other one and current from it will not only pass out to the line but would also drive the other machine as a motor.

Another reason why it is necessary to cut the generators out of the circuit when they are stopped is that if they are connected, they may not be able to "pick up the current," as it is called. This is true even when only one machine is used. The reason why the machine may not pick up the current is that the external circuit may be closed through a low resistance, so that the machines will have to start under a full load, and under such conditions, generators will not always build up electromotive force.

Suppose a generator is started with the main circuit closed,

and that the resistance is so low that the maximum current could be driven through it with the full voltage, then the current flowing through the armature with a small voltage would be quite strong. Now there is always a small amount of magnetism left in the fields of a generator, and this is sufficient to develop a small voltage, which will drive a comparatively strong current through the main circuit, but the current that it will force through the field coils will be next to nothing, as these have a high resistance. The result of this difference in the strength of the armature and the field coil current would be that the magnetism developed by the field coils would be insignificant, while that developed by the armature would be so far in excess of it as to completely overpower it, and thus prevent the machine from building up.

As a rule, when the current stops, all the devices in the circuit that are operated by it are cut out, so that if a generator were started with the *S S* switches closed, the chances are that it would pick up, but it might happen that all the devices were connected with the circuit, and then the result would probably be different.

When the generators are compound wound, the connections with the circuit are made as in Fig. 155. As will be seen from this diagram, the only difference between shunt and compound wound generators is that the latter have an additional set of field coils. We say set, because in these diagrams, the coil *M* represents all the shunt coils on the field, which may be one or two or even more, in a two-pole machine, while in a multipolar generator they would be equal in number to the number of poles. The coil *M* represents what are called the series, or compounding coils, and these will be the same in number, as a rule, as the shunt coils.

Examining these diagrams of the generators in Fig. 155, we shall find that the *M* coil is connected in the same way as in Fig. 154, but the *m* coil is so connected that all the current generated in the armature passes through it and thus the field is magnetized by the combined action of the two coils *M* and *m*.

It will be noticed that from the point *a*, where the shunt coil connects, a wire runs down to the switch, and when this is closed, point *a* is connected with bus *E*. This is the connection for both

generators. From the end of the series coils *m*, a wire *d* runs to the switch, and through it connects with bus *B*, while the wire leading from the right-side armature terminal is connected through the switch with bus *D*. The bus *E* is called the equalizing bus, and the wires which connect it with the point *a* are called the equalizing wires, or connections. The object of these connections, and the *E* bus, is to assist in keeping the currents of

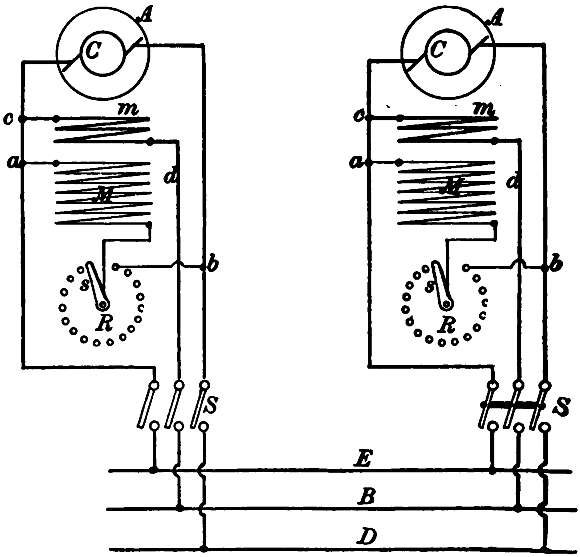


FIG. 155.

the generators equal. The way in which they accomplish the result can be made clear by the aid of Figs. 156 and 157.

These diagrams are drawn to show the connections of the armature and the series coils *m m* only; the shunt coils being left out so as to simplify the drawing. Fig. 156 shows the connections just as they are in Fig. 155, while Fig. 157 shows them as they would appear if the equalizer bus and connections were not ed. By examining Fig. 155 it will be seen that the effect

the connection through the equalizing bus is to connect the points *a* of the two machines and this is what Fig. 156 accomplishes in a simpler manner.

Suppose that in Fig. 156 the armature on the left side generates 40 amperes, while the one on the right generates 20, then the sum of the two currents will be 60 amperes, and this will pass through wire *c*. Now the current on leaving *c* will divide through the two *m m* coils in amounts that will be in proportion to the resistances of these coils. If both coils have the same resistance, each one will take half the current, that is 30 amperes. Thus we see that while one of the armatures generates 40 am-

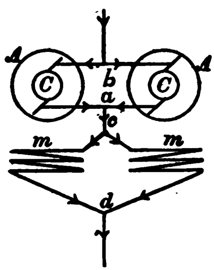


FIG. 156.

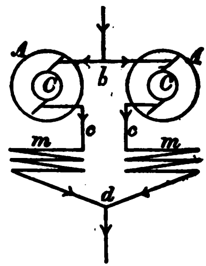


FIG. 157.

peres and the other one 20, the currents passing through the two *m m* coils are of the same strength, namely, 30 amperes.

If the connections were as in Fig. 157, it can be seen that the currents through the *m m* coils would not be equal but would be the same as those through the armatures; that is, one would be 40 and the other 20 amperes. Now, under the latter conditions, the armature generating the stronger current would have its field magnetized to a greater extent by the action of its *m* coils, and thus its voltage would be increased so as to further increase the current; while the generator developing the weak current would have its field strengthened to a lesser degree by its *m* coils; hence, the effect of these coils, if connected as in Fig. 157, would be to magnify the irregular action of the machines, so that if one tended to do more than its share of the work, the increased effect of its *m* coils would cause it to do still

more. By using the equalizing connection of Fig. 156, the *m* coils act to equalize the action of the generators, for no matter what the strength of the current through the armatures may be, it will be equally divided through the field coils *m m*.

In starting compound generators, one is connected with the circuit first, just as with shunt machines. Then the second machine is started and adjusted so that its voltage is slightly lower than that of the first machine. This being done, the left-hand switch *S* is closed, so as to make the equalizing connection. The next switch to be closed is the center one, which places the *m m* coils of the two generators in parallel relation just as in Fig. 156. When this connection is made, the voltage of the first machine will drop slightly, and that of the second one will increase, for as soon as the connection is made, the current passing through the *m* coil of the first generator will be reduced to one-half its strength, thus slightly reducing the strength of the field, while through the *m* coil of the second machine the current will increase from zero to the same strength as that flowing through the *m* coil of the other generator, thus increasing the voltage of the second machine.

We now close the right-hand switch and thus completely connect the second machine with circuit. If the two machines are not now taking their proper shares of the load, we adjust the rheostats so that they do, by increasing the resistance in the circuit of the shunt coils of the one that is doing more than its share, or reducing the resistance in the other.

In stopping, if the switches are separate, they should be opened in the reverse order to that in which they are closed; that is, the one that is closed last should be the first one to be opened. As in the case of shunt generators, the machines should be started before they are connected with the circuit, and must not be adjusted until running at full speed; and in stopping they must be cut out of the circuit before the engine is stopped.

# CHAPTER XXXII.

## Changing the Voltage of Generators.

GENERATORS such as are used to furnish current for incandescent lamps are called constant potential generators from the fact that they maintain the voltage, or potential constant regardless of how the current strength may vary. As a matter of fact, they do not keep the voltage absolutely constant, but the variation is so slight, in well-regulated machines, that for all practical purposes it can be regarded as constant.

Constant potential generators are made either shunt or compound wound. A simple shunt generator has its field magnetized by coils that are connected in shunt relation to the armature. A compound generator has its field magnetized by two sets of coils, one being in shunt to the armature, and the other in series with it. The shunt coils are made of many turns of fine wire, and the series coils are made of a few turns of large wire. Fig. 158 shows the way in which the shunt field coils and the armature are connected in a simple shunt generator. In a compound machine the only difference is that the armature current instead of passing directly to the line wires $L L'$, first passes through coils of wire wound upon the field magnets.

Constant potential generators are made so as to develop a certain voltage at a certain speed, but it is a very difficult matter to so proportion a machine that it will give the required voltage at exactly the speed desired. For example, if we start out to make a generator that will develop a voltage of 115 at one thousand revolutions per minute, we may find upon testing it that the speed required to give this voltage is 983 revolutions per minute. The next machine made from the same patterns, and as nearly a duplicate of the first one as possible, may require a speed of 992 revolutions per minute to develop the 115 volts.

It would not be desirable to mark each machine at the exact speed required, because there would be no uniformity; therefore, *a field regulator* is provided by means of which the voltage *can be adjusted within* certain limits and, with this, the gener-

ator can be run at one thousand revolutions per minute and the voltage will be 115. In Fig. 158 the field regulator is shown at *B*. This regulator is simply a resistance which is provided with a switch by means of which more or less of the resistance may be cut in or out of the field coil circuit. It varies the voltage of the machine by increasing or decreasing the strength of the field current.

Generally field regulators are made of such capacity that,

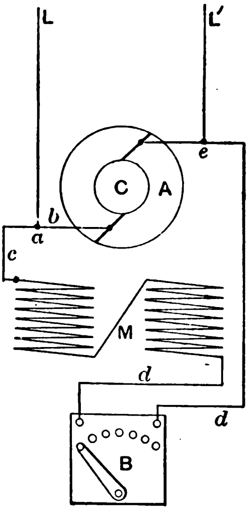


FIG. 158.

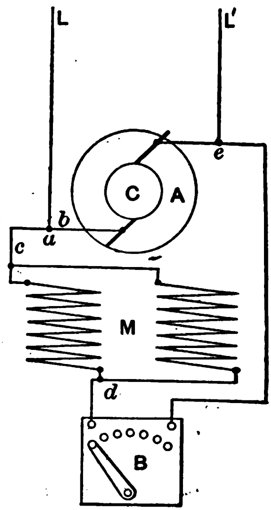


FIG. 159.

by inserting all the resistance in the circuit, the voltage can be reduced from 10 to 15 per cent, and in small generators, even as much as 25 per cent. This range of adjustment is provided because it is not always practicable to run the machine at the proper speed. Thus, if it is rated at 1,000 revolutions per minute, it may not be possible to run it any nearer to this mark than 950 *without going* to the expense of getting new pulleys. This re*duction in* speed would lower the voltage from 115 to about 109; *but if the* field regulator is of large capacity, the generator will *-robably* be able to develop the full voltage at even a lower

velocity than 950, for the machine is likely to be so proportioned that it will give the rated voltage at the rated speed with about one-half the field regulator in service. If the machine has to be run above the rated speed, the voltage can be cut down by inserting more of the field regulator resistance.

From the foregoing it will be seen that any generator can be adjusted to give a somewhat higher or lower voltage than that at which it is rated, by simply setting the field regulator. If we desire a higher voltage we cut out resistance; and for a lower voltage we add resistance. A further variation in voltage can be obtained by changing the speed of the generator, but a very great reduction in the voltage cannot be so made because, if the reduction is too great, the voltage will be so low that it cannot force through the field coils as much current as is necessary to cause the machine to act.

By increasing the speed the voltage is increased and the more the speed is increased the higher the voltage; so that the increase in voltage by increasing the speed is only limited by the speed that is practicable and by the strength of current that the field coils can carry without burning out. If the voltage is increased, the current through the field coils will be increased, so that the increase in voltage will be greater than the increase in speed, from the fact that we shall have an armature running at a higher speed in a stronger field. Owing to this fact, the increase in voltage will not be limited by the speed at which the armature can be safely run, for long before this speed is reached the strength of the current flowing through the field coils will be all that they can safely stand.

Without changing the speed of the armature, the voltage of the machine can be increased by connecting the field coils in parallel, as in Fig. 159. With this connection the strength of current passing through the field coils will be doubled, and if the wire will stand this increase without overheating, the voltage of the machine, at the same speed, will be increased 20 to 70 per cent, according to the density to which the field is magnetized with the regular connection of the field coils. If the coils cannot carry *the increased* current without overheating, an additional *resistance can be* connected in the circuit; that is, the resistance *of the regulator B* can be made greater. If this additional re-

sistance is not at hand, the speed of the armature can be reduced until the field current becomes weak enough not to injure the coils.

In the foregoing, several ways of changing the voltage of a generator are shown, but it will be noticed that in every case the variation is not very great, and it may be said that in general, it is not practicable to vary the voltage more than 70 per cent without reconstructing the machine; that is, if the normal voltage of the generator is 100 it cannot be increased to more than 170, and it cannot be reduced to less than 60 volts.

As multipolar generators have four or more sets of brushes,

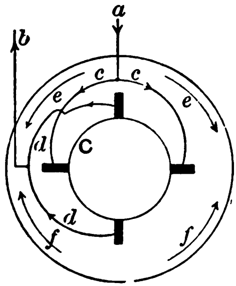

FIG. 160.

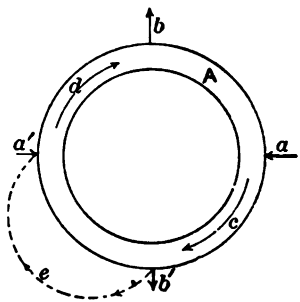

FIG. 161.

it has been assumed by some inexperienced men that by properly connecting these brushes, the voltage could be varied through a wide range. Such is not the case, however, and an attempt to make changes in these connections may lead to serious results. We will show why the desired result cannot be accomplished, and also what the actual result is liable to be.

In Fig. 160 the armature and commutator of a four-pole machine are shown diagramatically. The outer circle represents the armature, and the inner circle *C* represents the commutator. The four brushes of such a machine are connected with each other as shown, the two side brushes with line wire *a* and the top and bottom brushes with wire *b*. The current entering ' ough *a* follows the connecting wires c c to the side brushes,

and after traversing the armature passes through the wires *d d* to line wire *b*. The path of the currents through the armature is indicated by the arrows *e e* and *f f*, and frŏm these it will be noticed that each current flows through one quarter of the armature wire only.

Now, it is natural to suppose that, if we were to connect the brushes in the way indicated in Fig. 161, the current entering through brush *a* would follow the path of arrow *c* and come out through brush *b′*, and that, if it were then conveyed to brush *a′*, by means of a connection *e*, it would once more pass through the armature along the path indicated by arrow *d*, and

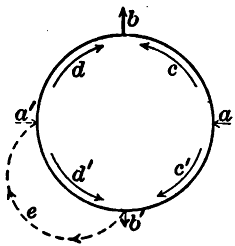


FIG. 162.

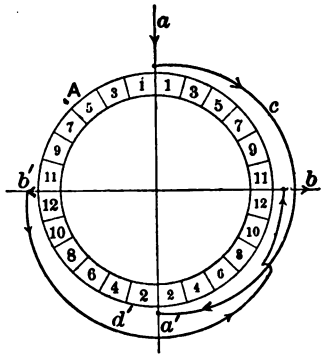


FIG. 163.

come out at brush *b*. If the current would follow this path, its voltage would be doubled, for the voltage developed in the path *d* would be equal to that developed in path *c*. The difficulty in the way of realizing this result is that the connection *e* not only enables the current generated in *c* to pass to brush *a′*, but also enables that generated in the quadrant spanned by *e* to return upon itself, as shown in Fig. 162. In this diagram it will be seen that the current generated in quadrant *d′* flows from *a′* to *b′* and thus the connection *e* simply serves as a short circuit *for this portion of* the armature; and a large machine with this *connection would* soon be disabled, as the heat developed in th

short-circuited portion of the wire would heat it to the burning point in a few minutes.

Armatures can be connected so that the electromotive forces generated in the several sections are added to each other, and when so connected they are said to have a series, or wave winding. But an armature wound so that the several e.m.f.'s are not added, cannot be made to give a higher voltage by changing the brush connections. The way in which armatures are connected for series or for parallel winding is illustrated in Fig. 163. If the armature is parallel-connected, or lap wound, as it is called, the current entering through wire *a* will pass through the coils 1, 3, 5, 7, 9 and 11, in both the upper quadrants; and through the connecting wire *c* it will reach brush *a'* and then flow through the coils 2, 4, 6, 8, 10 and 12, and in this way the currents will reach the side brushes *b b'* after traversing one-quarter of the number of coils on the armature. This is the case with a four-pole armature; with a six-pole the currents would pass through one-sixth of the number of coils, and so on for a greater number of poles.

If the armature is series-connected, or wave wound, the current from *a* will pass through coil 1, and then by a cross connection (not shown in the diagram) will reach coil 2, and from the end of this coil by another cross connection will return to coil 3, from which it will pass to coil 4. Thus the current will cross from one side of the armature to the other until it reaches coil 12, from which it will pass to brush *b'*. With this winding the connection *c* carries a part of the current to brush *a'*, from which it enters coil 2 and follows the same path as the current entering at brush *a*. The only object of the connection *c* is to provide more brushes through which the current can enter and pass out, and thus prevent the undue heating of the brush ends. If the connection *c* is removed and also the brushes *a'* and *b*, the action of the machine will not be interfered with in the least.

In a series-wound armature the path of the current may be better illustrated by Fig. 164, but to properly understand this it must be remembered that the current does not pass through *all the coils in* the quadrant *e* and then through all those in quadrant *e', but* through one coil in one quadrant and then through a coil *in that* opposite, and finally reaches the brush b.

While a series-wound armature can be run with two brushes and deliver its full current, a parallel-wound armature, if used with two commutator brushes, will deliver only a portion of its full current. This can be understood from Fig. 165, in which,

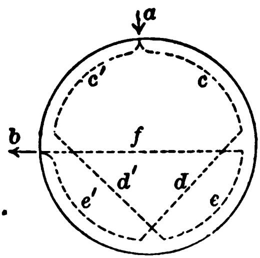


FIG. 164.

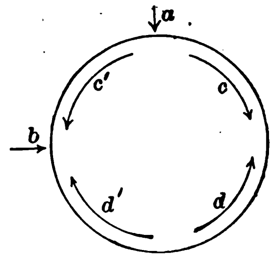


FIG. 165.

as there are only two brushes, *a* and *b*, the currents generated in the sections *c* and *d* have no outlet, and as the e. m. f.'s are in opposition to each other, they neutralize each other, so that only the current generated in section *c'* finds an outlet.

# CHAPTER XXXIII.

## Grounds and Field Short Circuits.

WHEN the insulation between an electric circuit or machine and the ground becomes impaired, so that an electric connection is made with the ground, the circuit or machine is said to be grounded. If the electrical connection so established is perfect it is called a complete or dead ground, and if the connection is imperfect it is called a partial ground. Overhead line wires become grounded by rubbing against limbs of trees through which they pass or against the walls of buildihgs into which branch connections are run, and in various other ways.

Line wires are, as a rule, covered with an insulating envelope, and to form a ground this covering has to be rubbed away by the chafing of the wire against the surface with which it comes in contact. In underground wires, ground connections are formed by the impairment of the insulating covering, either by the shifting of the wires, by the chemical action of gases, or by injuries inflicted by workmen when digging in the vicinity of the conduits.

One ground in a circuit will cause no damage, because the current cannot escape through such a leak unless there is another connection through which it can get back into the circuit. All the current that passes out of the generator through the positive wire must return to it through the negative; therefore, no current can leave the circuit proper, at one point, unless it can find its way back at some other point.

Although a single ground can do no damage, it is inadvisable to permit it to exist, for it is always possible for the second ground to form when least expected; and as soon as it does, there will be more or less serious trouble, according to the positions of the two grounded points. Tests for ground connections can be made in a simple manner, and in every case, where the distributing lines run any distance and specially if so situated 'at there is a decided liability of their being injured, tests should

be made every day. The apparatus required for making such tests is to be found in any place where a generator is installed, and it can be put in proper position in a few hours; after it is once installed the daily tests can be made in a few minutes.

For ground testing, the general arrangement of apparatus is illustrated in Fig. 166, in which *L L'* represent the bus bars on the switchboard, or if there is no switchboard, as may be the case in a small plant, they may be taken to represent the main distributing wires, from which the branch circuits are taken. *A* represents the armature and *M* the field of a simple shunt-wound generator, *R* being the field regulator. *B* is the main switch for connecting the generator with the line wires. If the generator is compound wound it will make no difference in the connections of the ground detecting apparatus. From the wires leading from the generator to the main switch *B*, two wires, *d d*, are run to contacts *e e'*, of a small switch *s*, which latter is connected with one of the terminals of an incandescent lamp *l*. The other terminal of this lamp is connected with the ground as indicated at *G*. To make this ground connection, the wire can be attached to a water pipe, care being taken that a good metallic contact is obtained.

To find whether there is a ground in any part of the entire circuit, the main switch *B* is closed so that the current of the generator may feed into the working circuit. From this it will be understood that the test is to be made while the machine is running and feeding the circuit. The small switch is now moved so as to connect with *e*, and then so as to connect with *e'*. If when in either position the lamp *l* does not light up, we know that there is no ground in any part of the circuit; at least, no ground sufficiently bad to permit a current of any magnitude to pass through it.

If the generator delivers a current at an e. m. f. of 110 volts, we can determine the existence of even imperfect grounds by substituting for the single lamp *l* several lamps of much lower voltage, their combined e. m. f. being 110 volts. Thus we could use two 55-volt lamps or four 25-volt lamps, these being connected in series, so that the current would pass through all of *them, one after the other.* Each one of these lamps should be *provided with a small* switch to short-circuit it.

With this arrangement of a number of lamps in series, we first close the switch *s*, with all the lamps in the circuit, placing it on *e*. If the lamps do not light up, we cut out one, and if the others still remain dark, we cut out another one, and so on until only one lamp is left in the circuit. If with this single lamp in service no light is produced, we then cut all the lamps back into the circuit, and move switch *s* to contact *e'*, and repeat the test.

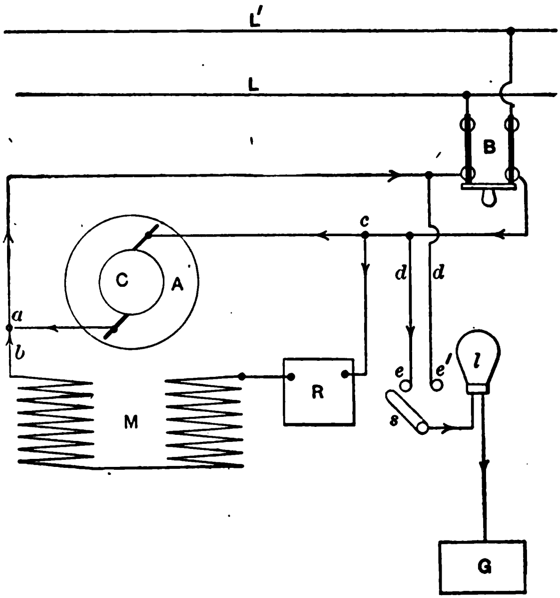


FIG. 166.

In this way an imperfect ground can be detected, because while the leakage current may not be sufficient to light up a single 110-volt lamp, it may be capable of producing at least a visible light in a 55 or 25-volt lamp.

Two wires, *d d*, are used to enable us to determine on which side of the circuit the ground is located. Suppose that there is a *on the main L*, or on one of the branches leading from *since the* contact *e'* is connected with L, it follows that

if switch *s* is placed on *e′*, only a small current will pass through the indicating lamp *l*; for it will be only that due to the slight difference in resistance between the ground connection and the portion of the line *L* between the generator and the point where the ground is located. If now we move switch *s* to contact *e*, which is in direct connection with *L′*, the whole voltage of the circuit will act to force a current through the lamp *l*. From this it will be seen that, if the lamp lights up when *s* is on *e*, we know that the ground is on the *L* side of the circuit, but if the lamp lights up with *s* on *e′*, we know that the ground is on the *L′* side.

After finding that there is a ground in the circuit, we can determine whether it is in the distributing lines or in the generator by opening the main switch *B*, for if upon opening this, the lamp *l* fails to light up, we know at once that the ground is beyond *B*. On the other hand, if opening switch *B* does not affect the lamp *l*, we know that the ground is in the generator or the connections running from it to *B*.

If the machine is a motor instead of a generator, we can test for ground connections by the same arrangement, but in this case the wires *d d* are to be connected with the line wires *L L′*, so that we may be able to test the line for grounds before the motor is connected. To connect the wires *d d* with the line wires *L L′* all that is necessary is to run them to the upper binding posts of the main switch *B*.

To test the line for ground, the switch *B* is opened, and then switch *s* is placed on *e* and *e′* in the manner already explained. If we find that the line wires are clear, the switch *B* is closed and the test is repeated, and if it shows a ground we know that this is located in the motor or in the connections between the motor and the main switch *B*.

If we now disconnect the field wires of the motor, as is illustrated in Fig. 167, and insert a resistance *R* in the armature circuit, we can find whether the ground is in the armature by connecting one terminal of a voltmeter with one of the commutator brushes, and the other with the field frame, or with any of the metallic portions of the motor as indicated at *c*. If this test shows the armature to be clear, we disconnect the wires from the brushes and connect them with the field terminals and

then repeat the test. If this second test shows that the field coils are sound, then we know that the ground is in the connecting wires.

Voltmeter *V* in these tests can be replaced by an incandescent lamp, in the same manner as the lamp in Fig. 166 can be replaced by a voltmeter. If a voltmeter is used in either test it should be capable of indicating as high an e. m. f. as that of the line current, otherwise the instrument may be seriously

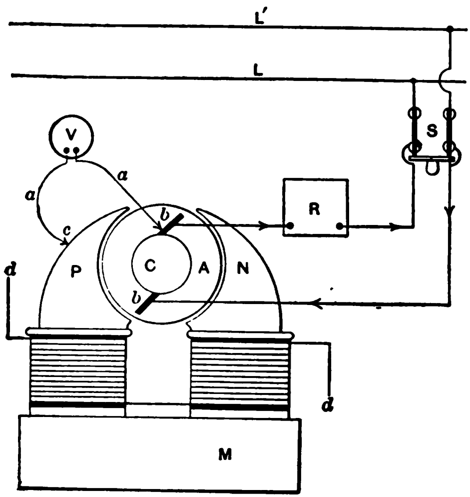


FIG. 167.

damaged by the current that will flow through it if there is a complete ground.

If a resistance for *R* in Fig. 167 is not at hand, we can get along without it by testing the field coils separately, and then disconnecting the connecting wires from the motor and testing each one of these independently. In testing these connecting wires, we must be careful not to connect their ends, for if we *do, the main* line will be short-circuited the instant switch *S is closed,* and the results may be serious.

*Sometimes* a motor or generator may not run well on a

count of a ground connection in the field which will allow a portion of the current to be diverted from its proper channel. If there is a ground in the armature, it is likely to produce such a disturbance as to render the machine practically useless, and if it is allowed to run, the leakage through the ground will soon end in a destructive burn-out, which will require rewinding the armature. Grounded armatures can seldom be repaired before they are burned out, but such is not the case with grounded field coils.

If, without any apparent reason, the brushes begin to spark badly, yet are found to be in proper adjustment, we may infer that there is some defect in the field coils, either a ground or a short circuit. By the method just explained we can determine whether there is a ground, and by the process illustrated in Fig. 168 we can ascertain whether there is a short circuit. This diagram represents a four-pole machine, which may be either a motor or a generator. A voltmeter connected with the mains $L$ $L'$ will indicate the full e. m. f. of the circuit, and if there are four field coils, as in the figure, a voltmeter connected with the ends $c$ $a'$ of one of the coils, as shown, should show a voltage equal to one-quarter of the total. If each coil is tested separately, the one which is short-circuited will show a lower voltage than the others, and in this way we can pick out the defective coil. This test is to be made while the machine is running. Sometimes, tests of this kind cannot be made with the machine in operation. This is generally the case with generators.

If a generator armature is short-circuited, it can be run only a few seconds before it will be burned out. If any of the field coils are short-circuited the machine can be run, but the sparking at the commutator is liable to be severe. On that account the tests for field defects, grounds as well as short circuits, are better made with the generator at rest, in which case it is necessary to use a battery to provide the testing current, and as the voltage of this is not sufficient to give on a voltmeter any reading that can be of service, it is necessary to substitute for the voltmeter a galvanometer; an ordinary detector galvanometer will answer the purpose. The most satisfactory kind of battery is the dry cell which can be obtained in any electrical supply store at a very low cost.

If the galvanometer needle swings around more than 60 degrees when connected to test a field coil, a resistance should be placed in series with it so as to reduce the angle of deflection. In making the test in Fig. 168, the battery is connected with the mains *L L′* and the galvanometer takes the place of the instrument *V″*. The number of cells of battery connected with

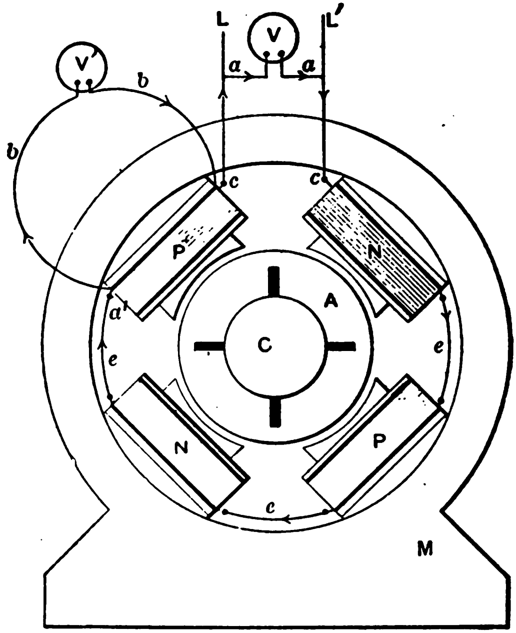


FIG. 168.

*L L′* will depend upon the resistance of the field coils, and can be easily determined by actual trial. If one cell gives a very small deflection of the galvanometer needle, say 10 degrees, try two cells connected in series, and then three, until the deflection is somewhere between 45 and 60 degrees. If one cell ...es too great a deflection of the galvanometer needle, use a ...ce *in series* with the instrument to cut down the current

passing through, thus reducing the deflection of the needle. If all the field coils are sound, the galvanometer needle will be deflected the same amount when each one is tested, but if one of the coils is short-circuited, the deflection of the needle produced by it will be smaller.

If the short circuit does not include the whole coil, the reduction in the deflection of the needle will be only a few degrees, but if the short circuit is from end to end of the coil, the deflection of the needle will be reduced to nearly nothing; thus, by the amount that the deflection of the needle is reduced, we can judge as to how much of the coil is short-circuited.

When the field coil that is short-circuited has been located, the next step is to find the defective points. This can generally be done because, at the defective points, a sufficient amount of heat will be developed to char the insulation and cause it to give out the odor of burned shellac. If the damage cannot be repaired without defacing the coil, which will most likely be the case, as the short-circuited points are almost sure to be below the surface, then rewinding is the only proper remedy.

Temporary repair can be made by removing the wire from a portion of the coil, as is illustrated in Fig. 169, holding the rest in position by means of wooden blocks. As each layer is removed, the ends of the wires on both sides of the opening are tested, and when the layers that are short-circuited are reached, the test will show that they are connected with each other—that is, if one of the ends of the wires from the galvanometer is connected with the end of one layer or wire on the coil, and the other end is connected with another layer, and the needle moves, then we know that these two layers of wire are short-circuited.

After all the short-circuited layers have been picked out in this way, the perfect layers can be reconnected, being careful to connect the ends that wind right sided with those that wind left sided; and also being careful that all the layers are connected in series. This latter result can be accomplished by connecting one of the wires from the galvanometer with the end of the top layer of the coil; then with the other end of the galvanometer wire, the other end of the top layer can be found. This is to be connected with any end that winds in the opposite

direction, and the remaining end of this second layer can then be picked out by the aid of the galvanometer, in precisely the same way that the remaining end of the top layer was found. This end is in turn connected with another end that winds in

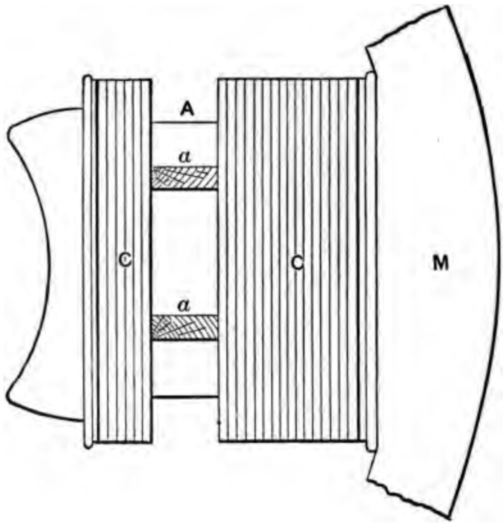


FIG. 169.

the opposite direction, and thus the connecting is carried on until all the layers that are perfect are joined up.

The machine will not run perfectly when patched up in this way, but unless a large number of turns have been rendered useless by the short circuit, it will work well enough for temporary use, until a permanent repair can be made.

# CHAPTER XXXIV.

## REPAIRING SHORT CIRCUITS IN ARMATURES.

DIRECTIONS for finding short circuits in the armatures of generators are not necessary, as in almost every case they find themselves; and the first notice we get of the fact is that the machine gives off a very strong smell of burning shellac, which is immediately followed by smoke and, possibly, some flame. After this the generator is useless until the armature is rewound. In some cases, the short circuit is only partial, and then the only way that its presence can be detected is by the odor peculiar to hot shellac. This is a condition that is seldom encountered, for even if the short circuit is imperfect at the start, when it reaches the point where the armature begins to heat up, it progresses so rapidly that, before we know what has occurred, the wire is burned out.

When a short circuit forms in the armature of a generator, it affords a path of comparatively low resistance through which a portion or all of the current can circulate, according to the position of the points between which the short circuit is effected. If the contact at these points, between the metallic parts of the circuit—that is, between the bare wires—is not very good, the resistance may be so high as to permit only a small current to pass; but this current will heat up the points of contact, and as a rule will result in making the connection more perfect, either by charring the small amount of insulating material between the wires, or by expanding the metal until the two parts come into more perfect contact.

Whichever way the action may proceed, the result will be that the resistance in the short circuit path will be reduced and the current increased, and as the action progresses, the change in resistance and current strength becomes more rapid, until a point is reached where the heat generated is enough to make the shellac *smell; only* a few seconds more will be required to *develop sufficient* heat to burn the insulation and perhaps fuse *the wire. Thus it* will be seen that in generators, short circuit

come almost without warning, and it is almost never that warning is given in time to save the armature from destruction.

With motors, however, the case is quite different. As a rule, if a motor armature is short-circuited it will not rotate when the current is turned on, even if the machine is running light. If it is helped by hand, it may rotate slowly, but with an irregular, jerky motion. In most cases, however, when turned by hand it will make a portion of a revolution and will then come to a standstill. In order to move it from the position in which it stops, a considerable effort will be required; but as soon as it has been carried beyond a certain point it will immediately swing forward of its own accord, and again come to a stop at the first position.

If short-circuited, a motor armature will not be burned out because it cannot rotate, since there is no electromotive force other than that of the supply circuit to force a current through the short circuit, and the supply current is controlled by the resistance of the starting box and the safety fuses or circuit breakers, whichever may be used, so that it cannot rise above a safe strength.

It is not a difficult matter to find the position of the short-circuited coils in a motor armature, but to find the exact position of the points of contact is, in most cases, rather difficult without removing some of the wire. By the aid of the accompanying diagrams we can illustrate the means that may be employed for locating short circuits.

In Fig. 170 the circle *C* represents the commutator of a motor armature and *V* is a voltmeter. This diagram represents a two-pole machine, for which two commutator brushes are required. The current enters through the upper brush and passes out through the lower one. From the segment of the commutator on which the upper brush rests, the current passes in two circuits through the armature coils until it reaches the segment on which the lower brush rests. After passing through each armature coil, the current reaches the wire that connects with the corresponding commutator segment, so that we may say that these connecting wires are reached progressively on each side of the commutator, in the manner indicated by the arrowheads on circle C.

Now, to force the current through the armature wire requires a certain electromotive force. Suppose that the armature is held so that it cannot rotate, and that one wire from the voltmeter *V* is connected with the upper brush, while the other wire is connected at different points on the surface of the commutator, as indicated at *c*. If the point of contact *c* is near to the upper brush, say the width of one segment, then the voltage indicated by the voltmeter *V* will be that required to force the current through one of the armature coils. If the point *c* is now advanced to the second segment, the voltmeter will indicate the voltage required to force the current through two armature

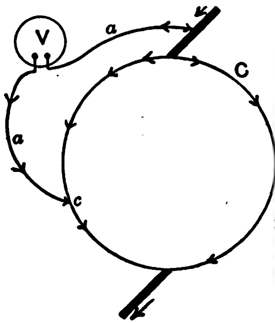


FIG. 170.

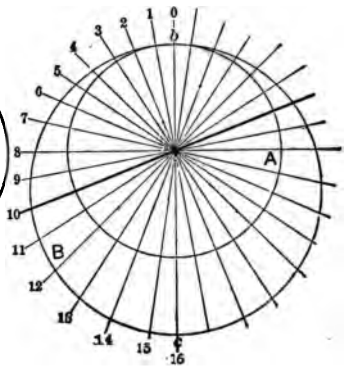


FIG. 171.

coils. In the same way, if the point *c* is advanced to the third segment, the voltmeter will indicate the voltage required to force the current through three coils, of the armature wire.

If we draw a diagram such as Fig. 171, which consists of a circle, *A*, and a number of radial lines, 1, 2, 3, 4, etc., equal to the number of segments in the commutator; and if on these lines we mark off distances extending outwardly from the circle, equal to the voltage indicated in the instrument *V* with the point *c* in the corresponding position; then, by tracing through the marks so obtained a curve, *B*, we shall have a representation on paper of the manner in which the voltage rises, as th

point $c$ in Fig. 170 is advanced from the upper brush toward the lower one.

This curve will show us the voltage required to force a given current through the armature wire from the point where the upper brush connects with it to the point where $c$ makes contact. If the armature is not short-circuited at any point, the resistance of all the coils will be practically equal, and as the voltage required to force a current through a resistance is equal to the current strength multiplied by the resistance, it follows that, as the resistance is increased uniformly by adding coil after coil to the circuit between the upper brush and the contact point $c$, the voltage will also rise uniformly.

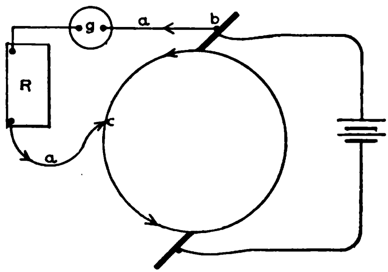


FIG. 172.

For making this test it is necessary to insert a large resistance in the armature circuit, so as to keep the current down to a safe limit. The motor starting box is of sufficient resistance, but it cannot be used for the purpose because the resistance coils are not of sufficient size to be kept in the circuit for more than a few seconds. The voltmeter used should be of capacity to indicate small voltages. It is not always possible to obtain a resistance suitable to be placed in the armature circuit, and likewise it is not always convenient to obtain a low-reading voltmeter—one that will indicate from 10 volts downward. We *will, therefore,* explain how this test can be made with a galvanometer.

*For this* purpose are required one or two dry battery cells, *can* be obtained in any electrical supply store at a cost

of 25 or 50 cents), a galvanometer of any kind, and a resistance, *R*, to place in the galvanometer circuit, as shown in Fig. 172. The resistance *R* is required because a very small current will produce a decided deflection of a galvanometer needle. The simplest form of galvanometer is known as a detector galvanometer, and good ones can be obtained for \$2 to \$3.

To test the armature with a galvanometer so as to obtain the curve *B* of Fig. 171, connect the two brushes with the terminals of the dry battery; then connect one terminal of the galvanometer with brush *b*, and the other terminal through re-

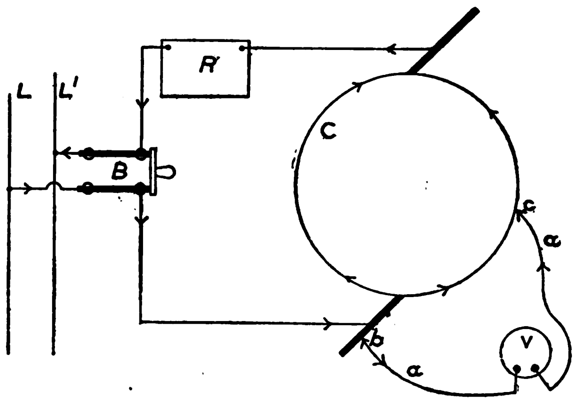


FIG. 173.

sistance, *R*, and the sliding contact *c* with the lower brush. Adjust the resistance *R* so that the galvanometer needle is deflected about 60 degrees, then move the sliding contact *c* back, segment by segment, and mark down, on a diagram prepared like Fig. 171, the degrees of deflection for each position of the contact *c*.

In this way a curve can be obtained which shows how the resistance varies from point to point between the brushes. It does not tell us the voltage required to force a given current through the wire, as does the test with the voltmeter, but that makes no particular difference. It may be well to mention that in using a galvanometer the instrument must be set level s

that the needle will swing freely, and also that it must be so placed that the needle points directly to the zero mark when there is no current passing through the instrument. In making a test with the voltmeter, as in Fig. 170, the armature is connected with the circuit in the manner shown in Fig. 173, with a resistance *R* sufficiently large to keep the current down to about the full-load strength.

In Fig. 171 the curve shown is regular like that for a perfect armature. It is not in correct proportion for such an armature, but it indicates the way that a test curve of a perfect armature would look.

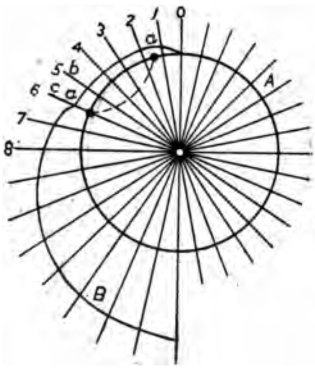


FIG. 174.

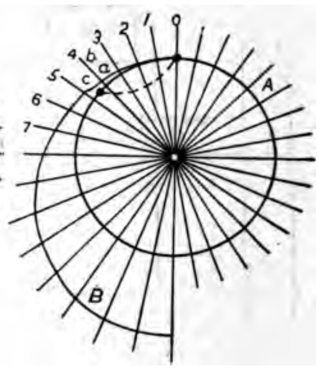


FIG. 175.

Now suppose that we test a short-circuited armature. Let the points that are short-circuited be located at *a a*, Fig. 174. Then in starting the curve, with the upper brush at *o*, the curve obtained would rise until it reached line 2 and the next measurement at position 3 would show but little rise in the curve. The voltage will be nearly the same until line 6 is reached. This shows at once that at *c* there is a direct connection with some point in the wire near line 2 which cuts out a large portion of the resistance.

To find out just where this point is, we revolve the armature one or two segments, and then test for another curve. Suppose that after several trials we obtain a curve such as shown

in Fig. 175, which rises hardly any until line 4 is reached, from this drop in the curve we realize at once that the segment at *c* is in a direct contact with the one from which we started the curve, for between these two points, the curve indicates practically no resistance; hence the short-circuited points *a a* are located one at segment *c* and the other at the segment at the top of the figure, on the line *o*.

If, in Figs 174 and 175, we were to continue to test the curve all the way around to the lower brush, we should obtain curves that would rise in a uniform manner as shown in these diagrams, provided there were no other short circuits in the armature; but if there were other short circuits, then for each one of these there would be a flat in the curve.

Sometimes an armature is short-circuited in several places; therefore, in making a test it is always advisable to obtain readings of the instrument for every position between the two brushes. If more than one short circuit is found, the segments with which they are all connected can be located by turning the armature around, one segment at a time, and making a test in each position so as to find those between which the rise in the curve is zero, as in Fig. 175 from *a* to *c*.

In making the foregoing test with a multipolar armature, the readings are taken for the number of commutator segments between two adjoining brushes, and the armature is advanced segment by segment and new readings taken to locate the short-circuited points. If the armature is parallel connected, the precise segments with which the short-circuited coils are connected can be located; but if the armature is series connected, the best we can do is to find the several segments that connect with the short-circuited coils. In a four-pole armature, there will be two segments that appear to be connected with each short-circuited point, if the armature is series wound; and in a six-pole armature there will be three segments apparently connected with each short-circuited point. By making a careful test the one of these segments that is the nearest to the point can be determined, as the others will give readings a trifle higher.

After the short-circuited points are located within certain armature coils, the next step is to see whether, by inspecting these coils, we can find the defective points. If the armatur

coils are held in place by means of wire bands, we may expect to find the short circuit formed through one of these. If no defects can be found at these points, then we must endeavor to determine whether the coils cross each other at the ends of the armature and, if possible, ascertain whether the defect is located at these points. If we find that there is no defect at these crossings, then the only place in which it can be found is between the armature coils and the armature core, and both defective coils must be in contact with the iron core.

In some cases it is possible to find the short-circuited points without removing wire from the armature; therefore, in every case, effort should be made to locate the difficulty without unwinding the armature. If, at last, we find that the wire must be removed, we should start from points that will enable us to reach the short circuits by removing the smallest possible amount of wire. When the defect is uncovered, it may be found that it can be remedied by simply inserting a small piece of insulating material and without using new coils. When the defect can be found from an external inspection, in most instances the short circuit can be easily removed by slipping between the points in contact a sheet of some stiff insulating material. In most cases, a piece no larger than a postage stamp will be all that is required.

## CHAPTER XXXV.

### FINDING AND REPAIRING BROKEN WIRES IN ARMATURES.

BROKEN wires, or to speak more correctly, open circuits in an armature, are far more common in small machines than in large ones. On that account they are more often met with in motors than in generators, because the former are more common in the smaller sizes. The reason for more trouble with small machines is simply that the armature wire is smaller, hence more easily broken.

Broken wires proper are generally due to vibration produced while the armature is in motion. In some cases they may be due to defects in the wire which are not noticeable when the armature is being constructed, but such is not often the case. For one reason or another, there may be a flaw in the wire, and this will in time be developed into an actual fracture by the contraction and expansion due to the heating and cooling of the armature.

In ninety-nine cases out of a hundred, it can be assumed that the break is not due to a defect in the wire, but to the continual vibration to which it is subjected when the machine is running. The portion of the wire that is wound tightly against the armature core, cannot vibrate as much as that which is held loosely; hence, the proper places in which to look for breaks are in the portions of the wire that are held the least firmly. Of all these parts, the connections running from the armature coils to the commutator segments are the ones having the least support. Experience shows that in almost every case a broken wire will be found to be located in these connections, or directly adjoining them.

For breaks the most common place is at the point where the connection is made with the commutator segment. In some cases the wire will be found broken off at this junction, but more often the connection will be simply loose. In some machines these connections are made by means of screws, and in others the wire is soldered into the segments. Screw connections are quite liable to become loose, especially if the screw

presses directly against the wire, as is sometimes the case. If the wire is held between the end of the segment and a clamping cap, by means of two screws, there is less liability of the connection coming loose. Soldered joints, however, are the most reliable, if properly made, and are more generally used.

One advantage claimed for the screw connection is that, if the armature has to be disconnected from the commutator, it can be done with less trouble than with soldered connections. This advantage, however, is not of much account, if the machine is properly made, because it is only in case of a breakdown that the commutator has to be removed.

If there is a broken wire or connection in the armature of a motor, the machine will continue to run, but the severe sparking at the brushes will show to the attendant that something is out of order. In a generator of the two-pole type, a broken wire will stop the generation of current, but in a multipolar generator, a broken wire will not, as a rule, do so. As already stated, the presence of a broken wire in the armature of a motor can be detected by the sparking at the commutator brushes, which is also true with respect to multipolar generators. The spark produced by broken wires is of such a character that it can be easily detected by any one who has seen it before. When it is understood how a break in the armature circuit affects the operation of the machine, the appearance of the spark can be readily pictured in the mind's eye.

On an armature the wire is so connected as to form an endless loop, and the brushes are placed upon the commutator so as to make connection with this loop at points that divide it into two equal parts, provided the machine is of the two-pole type. For a four-pole armature there would be four brushes, and these would divide the endless loop into four equal parts, and similarly a six-pole machine would have six brushes that would divide the wire into six equal parts. The commutator is simply a sliding contact arrangement by means of which the connection between the brush and the armature wire may be *shifted along* as the latter revolves.

*Commutator* segments are connected with the ends of ad*joining* armature coils, so that when one segment slides under *the brush* and the next one behind it comes into contact, the

connection with the armature wire is shifted ahead the length of one coil.

If the armature wire is perfect—that is, without a break—the current passing in through the upper brush will divide into two equal parts, and one-half will flow through the one side and the other half through the other side of the winding; these halves will meet at the lower brush. Suppose, however, that there is a break in the wire, as indicated at *b* in Fig. 176. Then it is evident that the only path by which the current can reach the lower brush is through side *A*. If the current flowing through the armature has a sufficiently high voltage, it will be able to jump over the break at *b*, as indicated by the line *a*, and thus establish a path through the *B* side of the wire.

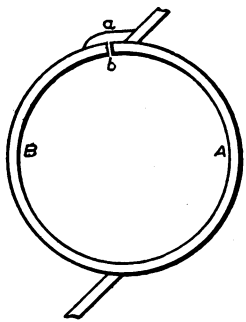


FIG. 176.

In an electric motor, this action actually takes place, and a spark leaps out of the end of the brush, as shown in Fig. 177 at *a*. If the motor is operated by a current of low voltage, say 110, the spark *a* may not draw more than ¼ or ½ inch, but with higher voltage it may lengthen out to 2 inches. In some cases, when the segments between which the break is located pass to some distance beyond the brush, the spark jumps from one segment to the other across the insulation, giving the appearance of a somewhat transparent ring of flame all the way *around the commutator.*

*One most striking* peculiarity of the spark due to a broken *wire is its flickering* in time with the rotation of the machine

Each time the segments between which the break is located pass under the brush, the spark draws out, until the distance becomes so great that it breaks. As this drawing-out process is repeated at each revolution it causes the spark to flicker and this is accompanied by an intermittent noise, the noise and spark keeping time with the rotation of the armature.

If the break occurs in the armature of a two-pole generator, the machine will not generate, because the armature itself must supply the voltage that drives the current through the circuit, and as there is a break when it reaches the position of *b* in Fig. 176, the current will not bridge it, for the simple reason that the armature does not get a chance to build up a sufficient

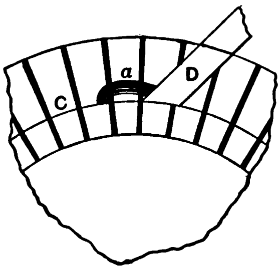


FIG. 177.

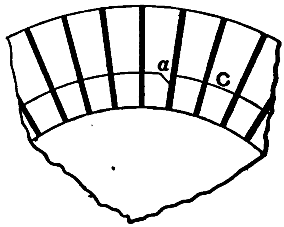


FIG. 178.

voltage, on account of the break. If the generator is of the four, six or eight-pole type, it will generate, because then the broken wire at *b* disables only one-quarter, one-sixth or one-eighth of the wire, and the remainder is sufficient to develop the necessary voltage to force the current over the break.

If an armature in which there is an open circuit or broken wire is run for a few seconds and then stopped, it will be found, upon examining the commutator, that in the case of a two-pole machine there will be one segment which has a corner badly burned away, as shown in Fig. 178. The segment diametrically opposite to this one may also show a slight burning, but nothing like as much as the one at *a*. If the machine is of the multipolar type there will be as many segments burned as there are pairs f poles, and these will be equally spaced all the way around

the circle. One of these, however, will be found to be burned more than the others, and to this one and to the segment back of it are connected the ends of the broken wire.

As already stated, if the machine is a two-pole generator, it will not generate with a broken wire in the armature, but from considering the action explained in connection with Fig. 176, it will be seen that if we could form the connection indicated in that figure by the line *a*, a current could be obtained, and such is actually the case. The simplest way of making this test is illustrated in Fig. 179, in which a strip of metal *a* is shown resting against the brush holder *D* with the end bearing upon the face of the commutator *C*. If the strip *a* is bent so that

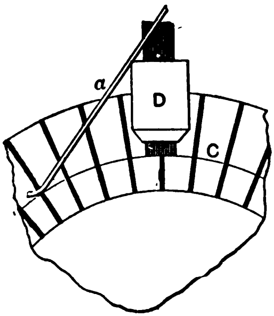


FIG. 179.

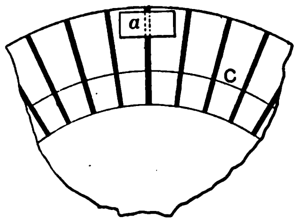


FIG. 180.

it can be made to bear upon the commutator some distance ahead of the brush, the machine will generate as long as the strip is in position. By running the armature for a few minutes with the strip in place, the segments connected with the defective wire will be burned and then, upon stopping the machine, the broken wire can be located.

Generally, when the broken wire has been located by the process explained, the disconnected ends can be easily found. In most cases the break will be simply a loose connection between the wire and the commutator segment. If this is not the cause of the break, the wire may be broken off just where it passes out of the shank of the segment. In either of these cases, the break can be easily repaired with a soldering iron. In some

cases, however, the broken ends cannot be found, and then the only remedy, short of disconnecting the armature and removing the wire until the ends are found, is to bridge the break, which is accomplished by simply making a connection between the segment *a* of Fig. 178 and the one back of it; that is, between the burned segment and the one back of it. This connection can be made by soldering a strip of brass to the two shanks, as shown at *a*, Fig. 180. Whenever this method of doctoring up the armature is resorted to, it is advisable to remove from the two connected segment shanks the ends of the coil in which the break is located; for it is possible for the break to be of such a character that it will mend itself, temporarily, when the machine is running. If it should, as the patch *a* forms a short circuit, the current developed in the coil would be very strong, and might heat the wire to such an extent as to damage the insulation of the adjoining coils.

This method of curing a broken wire, when the end of the break cannot be found, must be regarded as only a temporary expedient, and, as soon as possible, the armature should be taken out of the machine and, if necessary, the wire should be removed until the break is found and then repaired in a workmanlike manner. An armature doctored up in this way will run for any length of time and will continue to run even if a large number of breaks are bridged in the same way. In fact, the writer has seen armatures running with more than one-quarter of the commutator segments bridged, but the fact that the machine will run in this way does not prove that it is in perfect condition. As a matter of fact, it is far from it.

## CHAPTER XXXVI.

### Connection of Shunt-wound Motors with the Supply Wires.

TO MAKE these connections the proper way is shown in Fig. 181, in which *L L'* are the supply wires, *A* the motor armature and *M* the motor field magnet coils. At R is located a resistance, with a switch arranged to cut it out of the circuit, commonly called a motor starter. At *B* is placed a two-

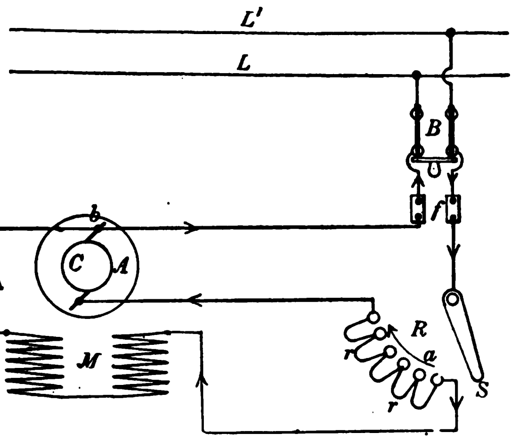


FIG. 181.

pole main knife switch and just beyond this safety fuses *f* are located.

One thing that may perplex the novice is, that while there are only two line wires *L L'* there are three wires, or binding posts, on the motor with which connections must be made, and there are also three binding posts on the motor starter *R*. An investigation of the motor will at once show that of the three wires, two come from the commutator brushes, and one from one end of the field coils. If the novice has good eyes, he will

soon discover that the other end of the field wire runs to one of the commutator brushes, as shown at *b* in the diagram.

It is clear that, if the three motor binding posts are all connected with the terminals of the motor starter *R*, there will be no way of making connections with the main switch *B*; therefore, all the motor wires cannot be connected with starting box connections.

Fig. 181 shows the proper connections for the type of motors commonly used to drive machinery, and which are operated by current derived from circuits that feed incandescent lights. This type is technically called a constant potential, shunt-wound motor. It is called constant potential because it is so designed that it will operate properly when supplied with a current of constant electromotive force—that is, a current whose voltage does not vary more than 3 per cent. It is called a shunt-wound motor, because the current that passes through the field magnetizing coils *M* is shunted from the main current, which passes through the armature.

In the diagram it can be seen that if the switch *S*, of the motor starter *R*, is turned to the left, so as to make connection with the first contact of *R*, the current can pass through the loops *r r* to the lower commutator brush and thus through the armature to the upper brush, whence it returns to the supply line. At the same time a separate current can flow from the first contact of *R* through the lower wire of the field coils *M*, and thus reach the main current at the upper brush *b*. From this it will be seen that the current that passes through the field coils *M* is shunted from the main line, so to speak, at the starting box *R*, and joins the line again at the upper commutator brush *b*.

For the field coils, the wire is fine, and of great length, and its resistance is so high that only a small amount of current can pass through it, the amount ranging from 5 per cent of the total in small motors down to 1½ per cent in large ones. The armature wire, on the other hand, is made quite large, so as to carry a large current without being overheated. In addition to being *large, it is* comparatively short, so that its resistance is very low—*that is, it* impedes the passage of the current to but a slight

nt.

If the armature were held so that it could not revolve, and the two commutator brushes were connected directly with the wires from the main switch *B*, an excessive current would pass through the armature, possibly twenty or thirty times as strong as that required to develop the full power of the motor; this current would soon destroy the armature. When the armature rotates, however, there is a back pressure developed in its winding, which is called a counterelectromotive force, and acts to hold back the current, thus preventing it from increasing to an excessive value. The faster the armature revolves, the higher will be the back pressure.

In the starting box *R*, the loops *r r* are resistances, generally made of wire wound in the form of spiral springs. This resistance impedes the flow of current. When the motor is started, switch *S* is moved to the first contact of the motor starter, and then the current that passes to the armature has to flow through all the resistance loops *r r*, and thus is cut down to the proper strength. As soon as the armature begins to revolve, it develops a back pressure, and as this acts to cut down the current strength, it can replace the resistance in the starter *R*. As the speed increases, switch *S* is moved from contact to contact, and by the time the armature has attained its full velocity, all the resistance of *R* will be cut out—that is, switch *S* will be advanced to the last contact.

From the foregoing, it will be seen that the object of the motor starting box is to provide a resistance that can be inserted in the armature circuit, while starting, so as to keep the current strength down to a proper limit while the speed and back pressure are building up to their normal running values.

Safety fuses *f* are provided to protect the armature from the effects of excessive currents at any time. In starting, if switch *S* is advanced too fast, the current will increase too fast, as the back pressure developed will be insufficient to replace the resistance cut out of the series of loops *r r*. Safety fuses melt when the current is too great, and thus open the circuit; they do not give way, however, the instant a strong current begins to flow, since sufficient time must pass for the metal of which they are made to be heated to the melting point.

*As it is desirable* in most cases to provide a protective de-

vice that will act instantly, when the current rises suddenly to very great strength, magnetic cutouts are also provided. These are sometimes independent pieces of apparatus, and are called circuit breakers; and in some cases they form part of the motor starter. The latter is then called an automatic overload starter.

It sometimes happens that, when a motor is running, the current in the supply main *L L'* for some reason dies out, and the machine comes to a standstill. In every such case, the starting box switch *S* should be opened; for, if not, when the current is re-established, the armature will be connected in the circuit with all the resistance of *R* cut out, and being at a standstill, the current passing through it will rise to a dangerous strength, as already explained. To prevent this contingency, starting boxes are made so that they will throw the switch *S* to the open position when the current dies out. Such boxes are called underload, or "no voltage" motor starters. Boxes are also provided with both kinds of safety devices—the overload and the underload.

Safety fuses are proportioned so that they will be melted with a current about 50 per cent stronger than the full-load current, provided this continues for a considerable length of time, say 5 minutes. The magnetic cutout is set so that it will not act with as weak a current as that, but when it is set for current of, say, double the normal strength, it will act instantly, if the current reaches this magnitude. Thus it will be seen that, if safety fuses and magnetic cutouts are both provided, the first are used to protect the armature from injury due to a prolonged current of about 50 per cent more than the full-load strength, while the latter are set to protect the machine from a sudden increase of much greater magnitude, or from a total suspension of the current.

Connections shown in Fig. 181 are the most desirable, but in many old-style motor starting boxes, and in some of modern make for small motors, the connections are made as in Fig. 182. The difference between the two is that in Fig. 181 the armature and the field coils are connected so as to form a closed circuit at all times, even when the switch S is in the open position, as shown.

In Fig. 182, when switch *S* is in the open position, the circuit between the field and armature is open. This is objectionable, because, if the field coil circuit is opened, there will be a heavy spark at the end of the contact *a*, and, in addition, there is danger of the insulation of the field coils being punctured. When wire is wound in coils of many turns, as is the case with the field coils of shunt motors, a very high voltage is developed at the instant the circuit is broken. This voltage is commonly called the kick of the coil. If a motor is of small capacity and for low voltage, say 1 horsepower and 110 volts, the kick may not be strong enough to damage the insulation, but it will produce a sufficient spark at the switch to roughen the contacts. With a larger motor of higher volt-

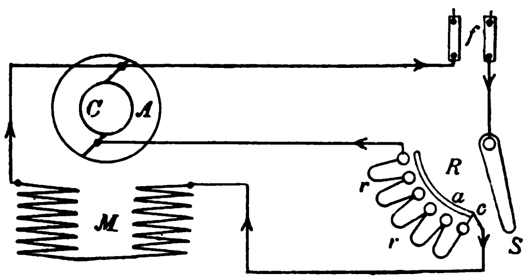


FIG. 182.

age, say 20 horsepower and 220 to 500 volts, the kick of the field coils will be so strong, if the circuit is opened, as to be almost sure to puncture the insulation. On this account motor starters should always be connected as in Fig. 181.

One objection to the connection of Fig. 181 is that when the motor is running, the field current has to pass through all the resistance loops *r r* of the starter. This objection, however, is far from being serious, because the resistance of these loops is small in comparison with that of the field coils, and it reduces the strength of the field current by an amount almost too small to be noticed. Some makers of starting boxes provide a plate contact, as shown at *a*, Fig. 182, for the purpose of letting the field current flow directly to the field coils without passing

through the resistance *r r*. To accomplish this result the plate is connected as shown dotted at *c* in Fig. 182. As will be seen, with these connections the field current flows through the arc *a* to the connection at *c*, Fig. 182, no matter where the switch *S* may be, between *c* and the other end.

Sometimes it is desired to connect a shunt motor so that it may be run in either direction. To accomplish this all that is necessary is to provide means whereby the armature current may be reversed; if the field current is also reversed, the motor will run in the same direction as before. To reverse a motor, a reversing switch must be used, as shown at *D* in Fig. 183.

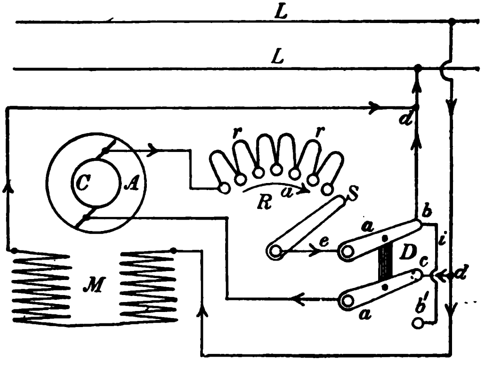


FIG. 183.

In this diagram, the main switch *B* and the fuses *f* of Fig. 181 are omitted for the sake of simplicity. The motor starter is placed at *R*. Most types of automatic overload and underload starters can be used with reversing motors, as they are not affected by the direction of the current through their magnet coils.

In Fig. 183 it will be seen that with the reversing switch *D* in the position shown, the current from the upper line wire passes to the lower commutator brush, and then through the armature and the motor starter, to contact b, and to the lower line. The field coil current is shunted from the points d d. With this arrangement, when the motor is stopped, by ope-

ing the reversing switch or the starting box switch, the field coil circuit is not opened, as points *d d* are not disconnected, but the field coils are not disconnected from the line. It is difficult to make a reversing switch that will not open the field circuit, yet will break the line connection.

One way in which a reversing switch can be made to prevent this difficulty, of opening the field circuit, is shown in Fig. 184. In this diagram the field coil terminals run to the contacts *e, e′* and *f*, which are connected with contacts *b, b′* and *c* respectively, by the blades of the reversing switch *D*. The

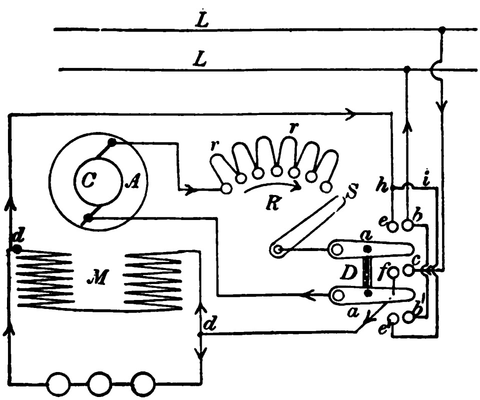


FIG. 184.

reversing switch is shown in the open position and, as will be noticed, the field coils are disconnected from the main line, but at the same time the field coil circuit is broken, so that the injurious effects produced by the kick of the coils will be experienced.

To get around this trouble, it is common practice to connect a number of incandescent lamps in parallel with the field coils, as indicated in the diagram by the three circles below the field. An objection to this plan is that, when the motor is running, some current flows through the lamps, and this causes just so much loss; but by increasing the number of lamps connected in series, the current can be cut down to a small amour

There are ways in which the reversing switch can be made so that when the motor is running, the lamp circuit, shunted from points *d d*, will be open, and will only be closed just before the reversing switch *D* is opened. These constructions, are rather complicated and are hardly necessary, since the current that will pass through the lamp circuit around the field coils can be made so small as to amount to practically nothing.

# CHAPTER XXXVII.

## Changing the Speed of Motors.

MOTORS are manufactured so that they may run at a constant velocity or so that the speed may decrease as the load increases, or again so that the speed may be changed at will by means of a hand regulator.

That known as a series-wound motor is the simplest form. A motor of this type is illustrated diagrammatically in Fig. 185, in which *A* represents the armature, *C* the commutator and *M* the field magnet coils. The diagram also shows the way in which such a motor is connected with the circuit, *L L'* being the line wires, *B* a main switch for making or breaking the line connections, and *R* a rheostat which is used to start the motor. This type of machine is called a series motor, because the armature and the field coil windings are connected in series with each other, so that all the current that passes through the field coils also passes through the armature. As shown by the arrow heads in the diagram, the current first passes through the field coils and then through the armature.

This type of motor has a natural tendency to run fast when the load is light, and slow when the load is heavy. If the belt is thrown off, it will run away, and as it is loaded down, it will continually reduce its speed. If the load is increased without limit, and there is no circuit breaker or safety fuse to open the circuit, the motor will keep on reducing its speed until the current becomes so strong as to heat the wires sufficiently to burn the insulation, and thus destroy the machine. From this it will be seen that a series motor will not run at a constant speed unless the load is constant; with a varying load, the speed will vary.

There is no way in which a series motor can be made to run at a constant speed with a varying load; hence, if you have a machine of this kind and want it run at a constant velocity with variable load, make up your mind that it cannot be made to do it. *Series motors* are used principally to run trolley cars

and, to some extent, for operating hoisting machines, pumps and fans.

Although a series motor changes its speed with changes in the load, the rate at which it changes its speed may not always be just what is required. By means of what is commonly called a motor controller, the speed can be changed by hand in any manner desired, within certain limits. A motor controller is constructed in substantially the same way as a motor starter, that is, it consists of a resistance and a contact lever, the two being connected so that more or less of the resistance may be cut into the motor circuit by the movement of the lever. The difference between a motor starter and a controller is one of

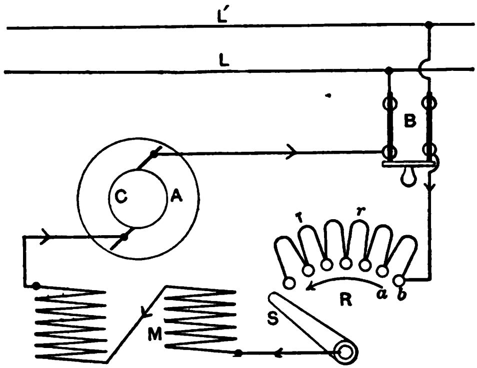


FIG. 185.

size only; the starter has to remain in circuit only a few seconds while starting the motor, and on that account the resistance can be made of small wire. The controller may have to remain in circuit for a long time; therefore, the resistance must be made of wire of such size that it can carry the full load current continuously without becoming overheated.

In Fig. 185, *R* may be taken to represent a motor starter or a motor controller, the loops *r r* representing the resistance that is cut in and out of the motor circuit. When the switch *S* is placed on the first contact to the left, the current entering at contact *b* will have to traverse all the resistance loops *r r*;

when *S* is advanced to the contact *b*, the current can pass directly to the end of the field coils without passing through any of the resistance loops *r r*.

Motor controllers can be used as motor starters, but a motor starter cannot be used as a controller, simply because it is of too small capacity. If in Fig. 185, *R* is a controller, then it is evident that by the movement of the switch *S* by hand to any position, any number of the resistance loops *r r* can be cut

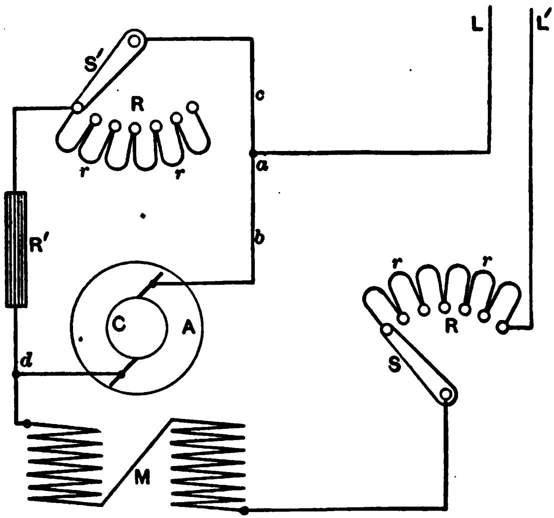


FIG. 186.

into or out of the motor circuit; hence, no matter whether the load be light or heavy, the speed of the motor can be varied by the movement of the controller switch *S*. The highest speed that the motor can attain will be with the switch *S* resting upon contact *b*, and the lowest will be with the switch resting on the first contact at the left-hand side. Thus the speed regulation is limited to a certain range, which is made large or small by increasing or decreasing the resistance of the controller *R*.

Another way in which the speed of a series motor can be

varied at will is by providing a circuit around the armature, which might be called a bypass circuit. Such an arrangement is illustrated in Fig. 186. In this diagram it can be seen that when the current reaches point *a* it can split, part going through the motor by way of wire *b*, and part around the armature by wire *c*. In the bypass circuit there is a resistance *R′*, and a speed controlling resistance *R*. The first-named resistance is made of such value that, when the controller switch *S′* is in the position shown and all of the resistance *R* is out of the circuit, the current flowing through the bypass is not more than the field coils *M* can carry, in addition to that coming from the armature. With this position of the switch, the current diverted from the armature is the greatest, and the speed the lowest. By moving the switch *S′* to the right, additional resistance is cut into the bypass and thus more current is forced through the armature, and the speed is increased, for the same load.

This means of controlling the speed of series motors by hand has the objection that all the energy used up in the bypass represents so much loss. It is much like varying the speed of an engine by opening a connection between the live steam pipe and the exhaust.

By connecting the field coils in parallel, as illustrated in Fig. 187 the natural speed of a series motor can be increased. Another way to increase the speed is by using a bypass circuit around the field coils, as shown in Fig. 188. This arrangement has the objection of wasting current the same as that shown in Fig. 186; but it is much more economical because the loss in the bypass is only a small fraction of the total energy used by the motor. The loss in the arrangement of Fig. 186 is probably ten times as great as in that of Fig. 188. The advantage of Fig. 188 over Fig. 187 is that, by making the resistance *R* in the bypass circuit in adjustable form,—that is, like a controller—the increase in speed of the motor can be made greater or less, as may be desired; while by the coupling of the field coils, in parallel only one change in speed can be obtained. Just how much the speed will be increased by the arrangement of Fig. 187 cannot be determined accurately without knowing a

the dimensions of the motor, but it will be somewhere between 20 and 100 per cent higher.

Ordinarily, stationary motors are of the shunt-wound type, and such machines run naturally at practically constant velocity without regard to the size of the load. When a motor of this type is running with a full load, if the belt is thrown off, it will not increase its speed more than 3 or 4 per cent. Motors of this type are called shunt-wound because the current that passes through the field coils does not pass through the armature, but is shunted from the latter.

These motors run at a constant speed without regard to the

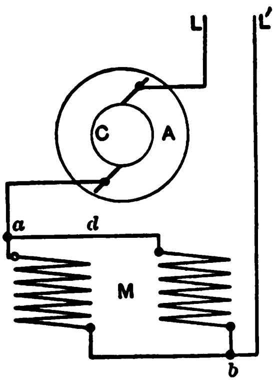


FIG. 187.

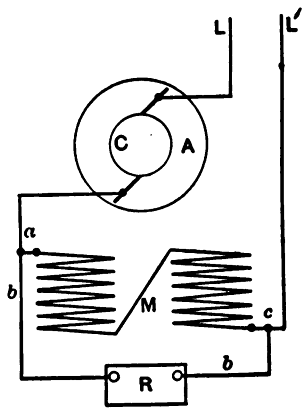


FIG. 188.

load they carry because the current that passes through the field coils remains constant no matter how much that through the armature may vary. Owing to the constant strength of current in the field coils, the strength of the magnetic field in which the armature revolves remains constant. The speed at which a motor armature will revolve in a constant magnetic field is dependent upon the voltage of the current. This voltage is *counteracted by the* back pressure developed by the motor *armature and also by* the voltage required to overcome the *armature resistance.* In shunt-wound motors, the armature re-

sistance is so low that the voltage required to overcome it is only 2 or 3 per cent of the total; so that the back pressure of the armature, or counterelectromotive force has to attain nearly the same magnitude whatever the load on the motor may be.

Since the constant current through the field develops a constant magnetic strength, and since in a magnetic field of constant strength the armature back pressure is constant at a given speed, it follows that the only variation there can be in the speed of the armature of a shunt-wound motor is that due to the slight difference in the amount of voltage balanced by the

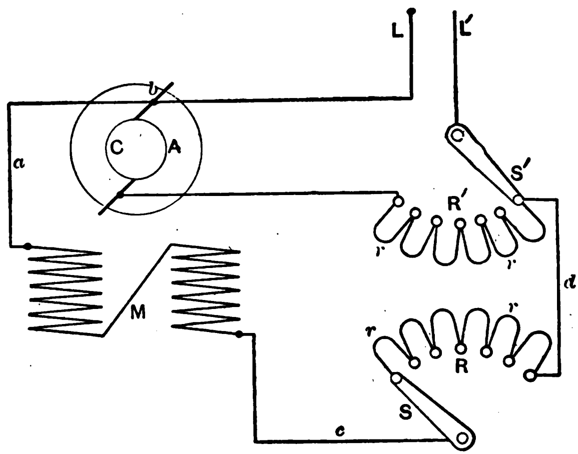


FIG. 189.

armature resistance with weak and strong currents; and this varies from nearly nothing, at light load, to 2 or 3 per cent of the total line voltage at full load.

From the foregoing explanation it will be seen that there are two ways in which the speed of shunt-wound motors may be varied, one by changing the strength of the current flowing through the field coils, and the other by placing in the armature circuit a resistance that will absorb some of the line voltage, thus leaving less for the armature back pressure to balance. By means of the last named expedient the speed of the motor

ı be reduced, since the armature will have to develop a lower :k pressure. By means of the first-named method the speed the motor will be increased, because, if resistance is intro- :ed in the field circuit, and the current is thereby reduced, magnetic force will be reduced, and as a result the arma- e will have to revolve faster to develop the required back ssure.

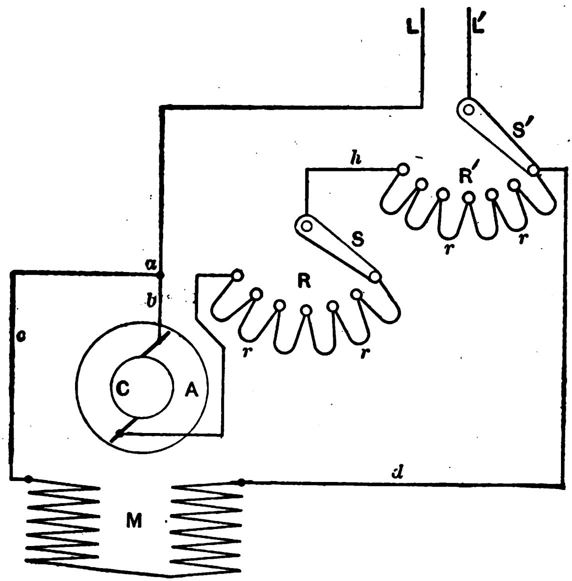


FIG. 190.

Fig. 189 illustrates the way in which a shunt-wound motor connected so as to increase its speed by inserting resistance the field circuit. The resistance in the field circuit is shown *R,* and by making it in the form of a controller—so that more less of it may be put in service—the increase in speed can *graduated.* This arrangement can also be used to make the *tor variable in* speed and controllable by hand, but the varia- *in velocity* will be from the normal speed to higher spee

The resistance $R$ may be made of small wire because it has to carry only the field current, which is generally a small fraction of the armature current, from 1½ per cent in large motors to 5 or 6 per cent in small ones. The resistance of $R$, however, will have to be large to make any great change in the speed. The ordinary field regulators used with generators can be used for this purpose, a regulator for a one-hundred light machine being about the proper size for a 10-horsepower motor of the same voltage. If one regulator does not give all the change in speed desired, use two connected in series.

Fig. 190 shows the way in which a shunt-wound motor is connected for varying the speed by inserting resistance in the armature circuit. By this means the motor can be made to run slower than the normal velocity, and it can be used as a variable speed motor controlled by hand regulation. In this diagram $R$ is the ordinary motor starter, and $R'$ is the resistance cut into the armature circuit. This resistance $R'$ may be an ordinary motor controller, such as is used with series-wound motors of the same size and voltage. If it is desired with this arrangement simply to reduce the speed of the motor, the switch $S'$ is turned until the proper velocity is obtained. If it is desired to vary the speed, the switch $S'$ is moved as often as a change in speed is desired. The starter $R$ cannot be used in place of the controller $R'$ simply because it is not of sufficient capacity to carry the current continuously.

## CHAPTER XXXVIII.

### Motor Starters and Controllers.

IN CHAPTER XXXIV the general principles upon which motor starters are constructed were fully explained. In this chapter, and in others to follow it, it is proposed to illustrate and explain a number of the most commonly used motor starters and speed controllers.

Motor starters are used for the purpose of starting a motor, only. Motor controllers are intended to regulate the speed at which the motor runs after it is in operation. Both devices are made so as to be used in connection with motors intended to run in one direction or in both directions. The construction of a motor starter is such that it controls the speed at which the motor runs in the act of starting. The construction of motor controllers is such that they can control the speed of the motor all the time. Thus it will be seen that both devices really act in the same manner, and, with the exception of a few differences in the details of construction, they are substantially the same. Controllers, however, are more massive in construction, and are able to carry large currents for long periods of time.

It is undesirable to use a motor starter that will perform only the function of starting a motor. If a motor is running and the current in the line fails for any reason, the machine will come to a stop; then if the current comes on again, it will catch the motor with the armature connected in the circuit without any resistance. As a result there will be sent through it a current strong enough to burn it out in a few seconds. Because of this fact it is necessary to provide a protective device that will open the motor circuit, if the current fails for any reason. Motor starters with this safety feature added to them are called "no-voltage" starters.

When a motor is running, if the load upon it is increased, the current will also increase, so as to give the machine the additional power required to carry the extra load. If the load is increased sufficiently, the current passing through the armatur

will be strong enough to burn it out. It is desirable, therefore, to have a protective device that will disconnect the motor before the current can become so strong as to injure the armature. Motor starters are made with such a device, and when they have this in connection with the no-voltage attachment, they are called "no-voltage and overload" starters. A type of no-voltage starters is shown in Fig. 191. It is manufactured by the Cutler-Hammer Manufacturing Co., Milwaukee, Wis. The course of

FIG. 191.

the current in passing through such a starter is shown in Fig. 192.

In this diagram the lines $P\,N$ represent the line wires, and $M$ is a double-pole main switch by means of which the motor circuit may be disconnected from the main line. At $f, f$ safety fuses are provided which melt and open the circuit if the current becomes too strong.

It will be seen that the wire $a$ connects the left side of the switch $M$ with the lower brush of the motor, and also, through the wire $g'$, with one end of the field coils. Wire b runs from the right side of $M$ to the binding post G at the bottom of the moto

:. This is connected with the stud $D$, around which the
ı arm $A$ swings. If $A$ is moved to the right, as soon as it
contact with the first of the contacts $E$, the main current
through the resistance in the starter, which is indicated

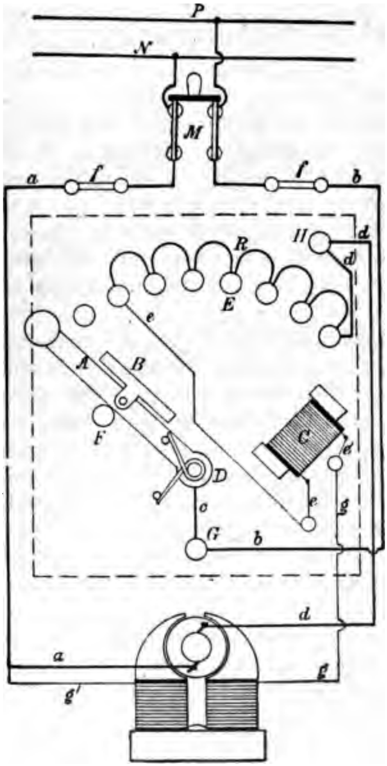


FIG. 192.

ɛ loops $R$, and reaches wire $d$, through which it passes to
*ɪper brush of the* motor; thence through the motor arma-
› *wire a, and* through the latter back to the main line.
· *for the field* coils of the motor branches off from th

first $E$ contact at the left, through wire $e$ to a magnet coil $C$; thence to wire $g$, and through the motor field coils to wire $g'$, which connects to the wire $a$.

Current passing through the magnet $C$ energizes it so that when the switch arm $A$ is moved as far as it will go to the right, and the piece $B$ rests against the poles of $C$, the attraction of the latter will hold $A$, the piece $B$ being made of iron. As is shown in the diagram, there is a spring around the stud $D$, which spring acts to swing $A$ around to the stop position; but, as long as a current passes through $C$, the attraction of the latter is more than the spring can overcome. If the current from the line fails, magnet $C$ becomes de-energized, and the spring is free to swing $A$ around to the stop position. If the line current is then re-established, the motor is not caught connected in the circuit without resistance in series with the armature. A stop is provided at $F$, so as to prevent the spring around $D$ from swinging $A$ too far.

In the second diagram, Fig. 193, the connections within the motor starter are substantially the same as in Fig. 192, and the releasing magnet $C$ is actuated in the same manner. An additional connection is made between wire $e$ and the iron core of magnet $C$, through wire $e''$, so that when $B$ rests against the poles of $C$ the current may pass through the coil of the latter directly from $A$ without having to go to the right-hand contact $E$ and thence through the resistances $R$ to wire $e$. The effect of this arrangement is to slightly increase the strength of the magnet, and to provide an additional path for the current, so that if, for any reason, the circuit through the resistances $R$ should be broken, there would still be another path through $e''$ and the core of $C$. There is a spring around the stud $I$ which acts to swing the switch lever $A$ around to the open position whenever the current through the motor fails, precisely the same as in Fig. 192, but it is not shown in the diagram.

Fig. 193 is the type made by the Cutler-Hammer Co. for motors, using currents not exceeding 50 amperes. For larger motors, this company provides the starter, which is diagrammatically shown in Fig. 194. In this design, the circuit connec-
ons are the same as in the two preceding diagrams, Figs. 192
d 193, with the exception that when the lever A is raised t

vertical position and all the starting resistance *R* is cut out the armature circuit, a spring connecting piece *D* is forced contact with the blocks *E E,* thus providing another, and

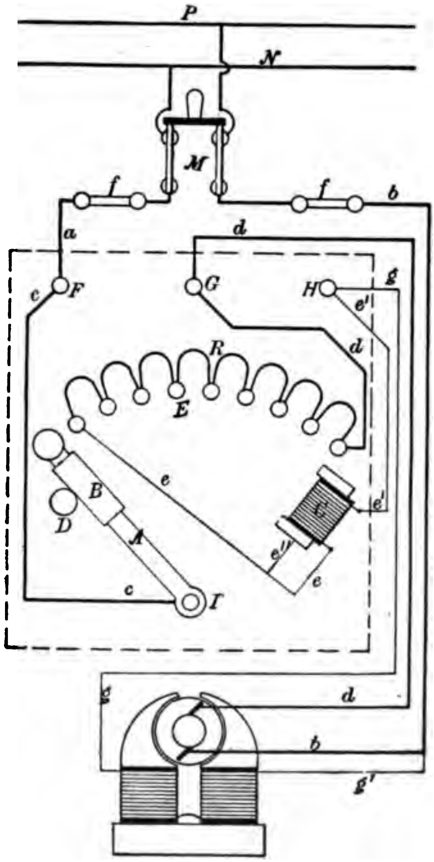


FIG. 193.

e *direct,* path for the main current between wires a an iron block *B* on lever *A,* is located at the extreme end

magnet *C* is placed outside of the resistance contacts *I I*, thus enabling a comparatively small magnet to force the connector *D* against *E E* with sufficient pressure to make a good contact.

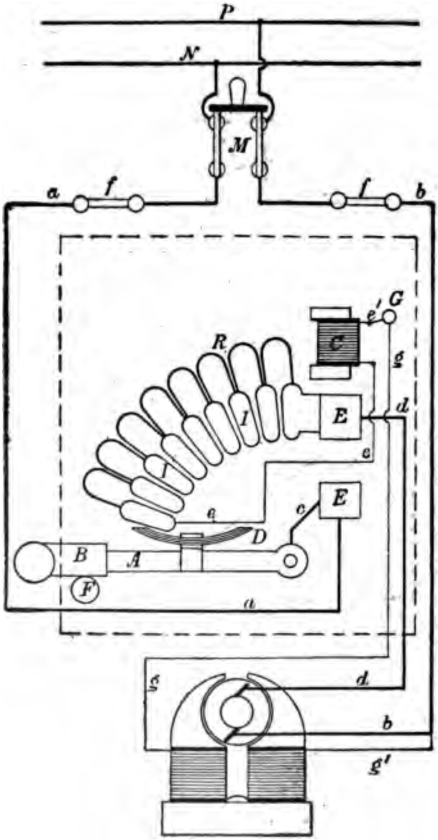


FIG. 194.

One advantage of this construction is that the contacts I I need
be as large as when the blocks E E are not used, and,
tion, if, for any reason, the connections in the resistanc

become broken or imperfect, the current can find a path through *E E* and the connector *D*.

In these three diagrams it will be noticed that the connections between the motor and the starter are such that the circuit through the field coils of the motor is never opened. As was fully explained in Chapter XXXVI, this arrangement is necessary to prevent serious sparking at the last contact to the left of the starter, when the motor is stopped, and also to avoid injuring the insulation of the motor field coils. In Fig. 192, if the circuit is traced from the upper motor armature brush it will be found that it passes through wire *d* to the right-hand contact *E*; thence through the resistances *R* to wire *e*, through magnet *C* to wire *g*, through the motor field coils to wire *g'*, through wire *a* to the lower motor brush, and finally through the armature to the upper brush, which is the starting point. Thus it will be seen that the motor field and armature are connected so as to form a loop, or closed circuit. In Fig. 193, if we start from the upper motor brush through wire *d*, we come back through wire *g* to the motor field through wires *g'* and *b*, to the lower brush, and through the motor armature to the starting point. This is also the connection of the armature and field shown in Fig. 194.

Plain motor starters that are not provided with an automatic releasing magnet *C* are sometimes connected after the manner shown in Fig. 195, but this is not an arrangement to be recommended. In looking at this diagram it will be seen that, if the main switch *B* is closed, the circuit through the field coil *D* of the motor will be closed. If now the switch lever *C* of the motor starter is moved to the right, over the contacts *E*, the circuit through the armature *A* of the motor will be closed, and the motor will be set in motion.

If when the motor is running we open the main switch *B*, the motor will be disconnected from the main line *P N*, and the circuit through the motor field will not be opened. As the line current is cut off, the motor will come to a stop, and then we can move switch lever *C* to the open position without doing any harm. *If we should* undertake to stop the motor by opening *switch lever C instead* of *B*, the result would be a considerable *sparking at the* contacts *E*, and if we then opened switch *B*

disconnect the motor from the main line, the circuit through the field *D* of the motor would be opened, and if the machine were large, the probabilities are that the insulation would be damaged.

The objection to arranging the circuits of the motor and starter in the manner shown in this diagram is that while with it the motor can be stopped without injury, there is danger of the switch levers not being manipulated in the proper order,

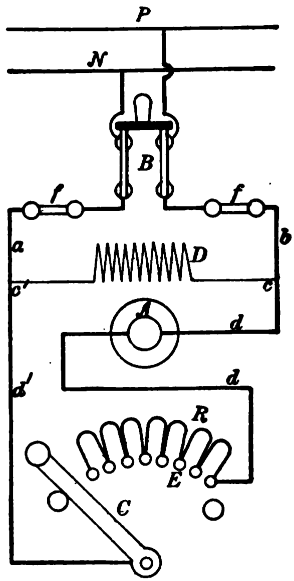


FIG. 195.

either through ignorance or carelessness. Furthermore, if the switch *B* is opened first, as it should be, there is danger of forgetting to open *C* when the motor comes to a stop. And in such an event there would be great liability that the switch *B* might be closed to start up the motor, without first returning *C* to the open position.

## CHAPTER XXXIX.

### No-Voltage and Overload Motor Starters.

IN THE LAST chapter we described automatic no-voltage motor starters, which are also called underload automatic starters. Figs. 196 and 197 are now given to illustrate no-voltage and overload starters, the first being made by the Cutler-

FIG. 196.

Hammer Co., and the second by the Ward Leonard Electric Co. Fig. 196 shows an arrangement which combines with the motor starter proper, a two-pole main switch, and two safety fuses. *Fig. 197 might* be arranged in the same way.

*For Fig. 196* the circuit connections are shown in the dia-

gram, Fig. 198. As will be seen, the main switch $M$ has its upper left-side terminal connected with the $N$ line through wire $e\,e'$ and the lower right-side terminal with the $P$ line through wires $g\,g'$, the safety fuses being located at $f\,f$. From the lower left-hand terminal of $M$, wire $a$ runs to binding post $G$ and the upper right-hand terminal of $M$ is connected through wire $b$ with the lower brush of the motor armature. From $G$ through wire $h$ the circuit runs to magnet $D$ through the coil of which the entire current that actuates the motor is passed. From $D$

FIG. 197.

through wire $c$ the circuit runs to switch $A$, and when this is moved over the contacts $E$ the circuit continues through wires $d$, $d'$ and $d''$ to the top motor brush, thence through the motor armature to wire $b$ and back to the main line.

From the left-hand $E$ contact a wire $i$ is run to magnet $C$ and then through wires $j, j'$ and $k$ to the motor field coil, from which the circuit continues through $k'$ to wire $b$. It will be seen that magnet $C$ is connected in the same way as is the same magnet in the no-voltage starter, and it acts in the same manner, that is, it holds lever $A$ in the extreme right-hand position

gainst the tension of a spring wound around the stud upon

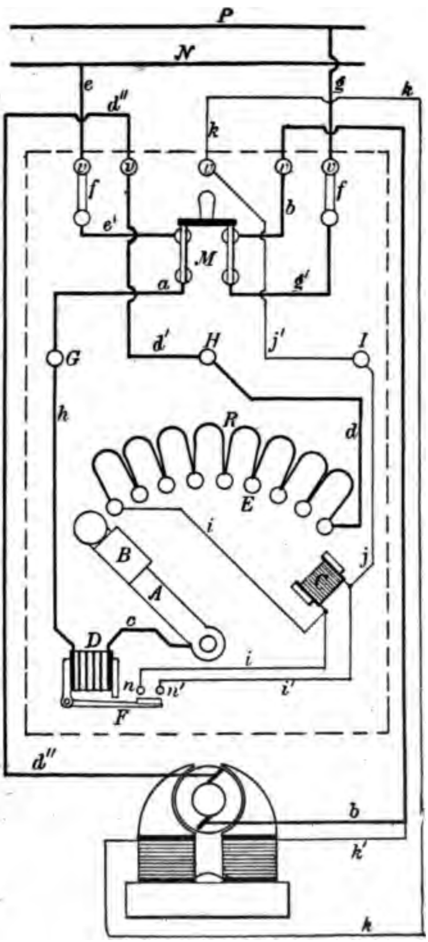


FIG. 198.

ich *A* swings. The magnet *D* is traversed by the whole c

rent, hence its strength increases as the whole current increases, and when the latter reaches the strength for which the magnet is adjusted, the armature *F* is lifted and its end connects the terminals *n n'*. In this way the magnet *C* is short-circuited and loses its strength, permitting the spring to swing *A* around to the open position, and stop the motor. From this description it will be seen that magnet *C* acts precisely the same as in the no-voltage starter, and that the office of magnet *D* is to shut off the current from *C* whenever the current passing through the motor is strong enough to lift the armature *F*.

Automatic motor starters, whether of the type shown in the last chapter or like those here presented, hold the lever *A* firmly in the extreme right-hand position when the motor is running and the latter cannot be stopped by moving *A* back to the stop position, unless a considerable force is employed. To stop motors provided with such starters, the main switch *M* is opened and then, as soon as the current through the motor dies out, the magnet *C* loses its strength and allows the force of the spring around the stud of *A* to swing the latter to the open position. With the overload starters, it is possible to stop by simply lifting the armature *F* so as to short-circuit magnet *C*.

As it is a very easy matter to lift *F*, much easier than to open the main switch *M*, some men get in the way of resorting to this method of stopping the motor; but it is not advisable to follow the practice, because, when this is done, the circuit connection between lever *A* and the contacts *E* is broken while the full current is passing, and as a result there is considerable sparking at the contacts *E*, which in time gets them so rough as to prevent the switch from working freely.

Fig. 199 shows the circuit connections for the starter illustrated in Fig. 197, all parts of which, except the overload magnet *G*, act in the same manner as in Fig. 198. The action of the overload magnet, however, is quite different. The lever *D* is held in position by the catch *F* and a spring around stud *I* acts to swing *D* upward. The end of *D* rests upon a contact with which wire *c* is connected, so that, with the parts in the position shown in the diagram, the current from A passes through D to wire *c* and thus to line wire N. The magnet G is of the sole-
-d type and exerts a force to lift the plunger s. When the

main current becomes strong enough, magnet *G* lifts plunger *s* and the latter, striking a blow against the end of *F*, throws the catch at its upper end out of engagement with the lever *D*, when

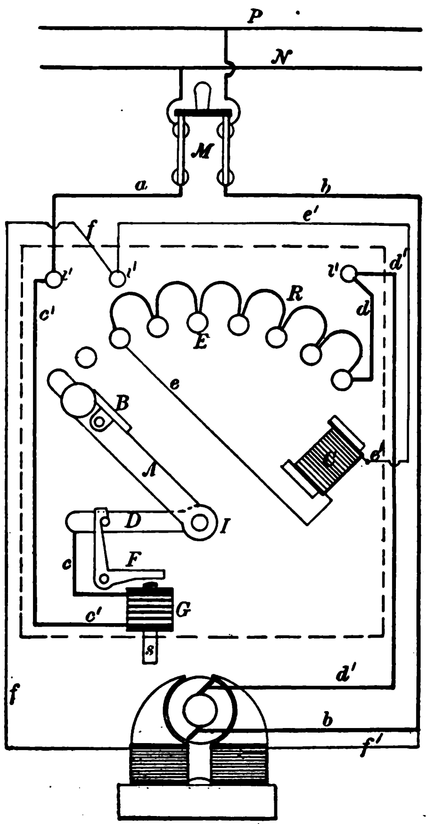


FIG. 199.

*this lever, actuated by* the spring around stud I, flies upward and
*reaks the contact* between wire *c* and switch *A*, thus openi
*e circuit through* the motor armature.

As will be noticed in Fig. 197, the plunger *s* is guided by a frame attached to the lower side of magnet *G*. This plunger is held in its normal position by means of a set screw which is seen projecting below the frame, and by adjusting this screw, the device can be set so as to cause the plunger *s* to lift with different strengths of current. There is a scale marked in amperes on the front of the frame that guides *s*, and attached to the latter there is a pointer that moves over this scale, so that, by the movement of the adjusting screw, the magnet can be set to act at any desired number of amperes. With this starter, the motor can be stopped by lifting *F* so as to release *D*, but, as stated in connection with Fig. 198, the practice is a bad one, and should not be followed.

It will be noticed that in Fig. 198 fuses are shown at *f f*, while in Fig. 199 there are none. It may be asked why they are used in one case and not in the other; and, since the overload magnet acts to open the circuit when the current becomes too strong, why are fuses used at all? In answer to these questions it may be said that this type of starter can be used without fuses, if desired, as the overload magnet is generally sufficient protection. Fuses can be used with Fig. 199 just as well as with Fig. 198.

All things considered, it is advisable to use the fuses, because they act in a manner somewhat different from that of the overload magnet, and hence afford additional protection. The overload magnet will respond to a very sudden increase in current, even if it lasts for only a short time, and on that account gives complete protection for the motor against sudden rushes of current. The safety fuse will not respond to a sudden increase in current because it requires some time to heat the fuse wire up to the melting point, but sufficient increase in current, if continued, will melt the fuse.

Fig. 200 shows a type of motor starter made by the Cutler-Hammer Co. for use in connection with very large motors, 100 horsepower or more. The complete apparatus is shown as filling one whole panel of a switchboard, the diagram of wiring connections for which is shown in Fig. 201. At the top of the panel is located a circuit breaker which acts in the same manner as overload magnet in the starters already explained. The

magnet of this circuit breaker is shown at *F*, and is arranged so

FIG. 200.

not to be traversed by the whole of the main current, as this

would require very large wire. The current for this magnet is shunted from the ends of the bent bar *I*, which is so made as to offer proper resistance to force the required current through the magnet. The lever of the circuit breaker connects the contacts *L L*, and the circles *gg* represent magnets used to extinguish the spark produced when the contact across *L L* is broken. The switch at the lower end of the panel is the main-line switch, which, in the closed position connects the contacts *S S* and *S' S'*, the pairs on the right and left sides, respectively, being connected with each other.

Along the center of the panel is a row of switches for the purpose of cutting out the resistance in the armature circuit; that is, they take the place of switch lever *A* in the other starters. These switches are made to interlock each other so that No. 2 cannot be moved until No. 1 is closed, and so on for all the others. The small magnet *n* is for the purpose of holding these switches in position and of releasing them all when the main switch is opened. At *G* a pilot lamp is placed to indicate whether there is a current in the circuit before the switch is closed, and also for the purpose of lighting up the panel when desired. At *H* is placed a switch to close the lamp circuit when the main switch is open. This switch is opened before the main switch is closed. When the main switch is open, the contacts *p* and *q* are connected with the *S'* and *S* contacts directly above them.

When the main switch *M* is closed, the current from main-line wire *P* in wire *b* passes through *g'* and the blow-out magnets *g* to wire *h* and to contact plate *C*, thence by wire *h'* to magnet *n* and to wire *i*, through lamp *G* to *i'* and contact *p* of main motor-starter switch. If switch *H* is closed, the current will pass to *q* and thence to the lower contact *S* above it, to wire *a* which runs to the opposite side *N* of the main line. If the circuit breaker *F* is now closed, the main current will flow through *I* to contacts *L L*, to wire *c* and to the upper *S'* contact of the main switch. If this switch is also closed, the current from the upper *S'* will pass to the lower *S'* and thus through the motor armature to wire *e'* and to contact plate D.

*If* the first or left-hand switch of the center row is now *closed,* the main current will pass from D through the rting resistances *R* to contact plate C, through the switch le

contact *B*, thence through wire *d* to the upper contact *S*,

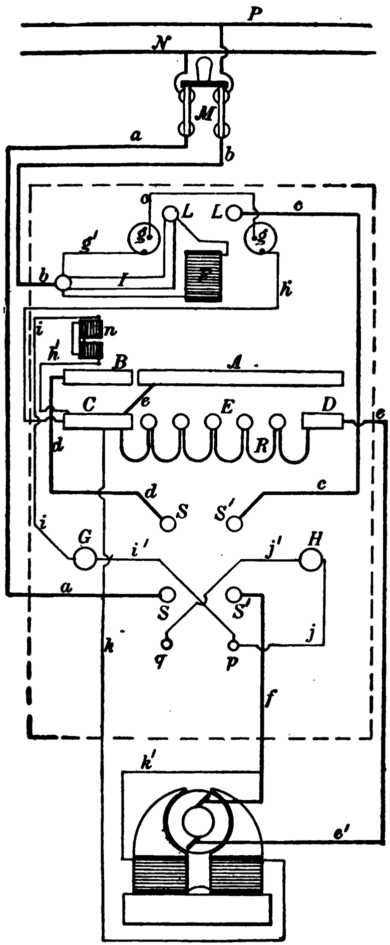


FIG. 201.

*ugh the main* switch lever to the lower S and to wire a.

returning to the main line. The field current will branch from wire *f* through wire *k'*, and from the field will go to contact plate *C* through wire *k*. The plate *A* is connected with *C* by wire *e* so that, as the switch levers are successively pressed into position, the contacts *E* are connected with *A*, one after the other, thus cutting out in succession the several sections *R* of the starting resistance. As switch *H* is open when the motor is running, the current through magnet *n* will break as soon as the main switch breaks the connection between the contacts *S S* and *S' S'*.

# CHAPTER XL.

## Motor Controllers.

FIG. 202 shows a controller that is arranged to vary the speed of the motor by cutting resistance into the armature circuit and also into the field circuit. By cutting resistance into the armature circuit the speed is reduced, and by cutting it into the field circuit the speed is increased. Fig. 203 shows a

FIG. 202.

controller that is arranged to vary the speed of the motor in the same way as Fig. 202, and in addition is provided with means for stopping the motor quickly. This quick-stopping addition is very desirable in connection with motors used to operate printing presses and also for many kinds of motor-driven machine tools. *Both illustrations* are of controllers made by the *Cutler-Hammer Manufacturing* Co.

Circuit connections for Fig. 202 are shown in the diagram, Fig. 204. The connections are substantially the same as for a motor starter, the wire *a* running from one side of the main switch *M* to one of the motor brushes, and the other side of the switch being connected with the switch lever *A* through wires *b* and *c*. The resistances represented by the loops *R*, which connect with the segment *G*, are in the circuit of the armature of the motor, and the resistances represented by the small loops

FIG. 203.

*r*, which are connected with the segment *E*, are connected in the motor field circuit.

Magnet *C* acts the same as in the motor starters, to open the circuit through the motor armature whenever the current dies out in the main circuit. The segment *B* which is attached to the lower end of lever *A* is provided with teeth, as indicated at the upper portion, these teeth covering the whole segment. The armature *D* of magnet *C* carries a spring catch at the outer end, which engages with the teeth on the segment B, when *D* is drawn down into the position shown in the diagram, by the attraction of *C*.

The resistances $R$ are made of sufficient size to carry the hole current that passes through the motor armature for any ıgth of time without getting too hot. On this account, if it desired to run the motor at a low velocity, the lever $A$ is ɔved over the contacts connected with the resistances $R$ until

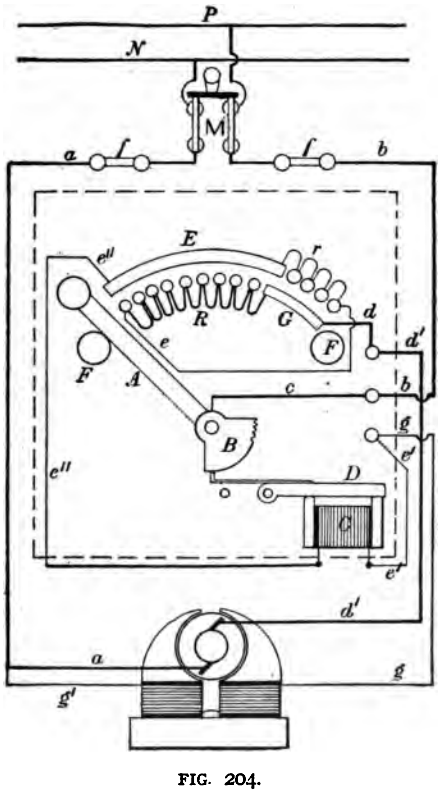


FIG. 204.

e proper speed is obtained, and is left in that position. The ch on the end of $D$ engages with segment B in this position ' prevents $A$ from being thrown back to the stop position b

the force of the spring that is placed around the stud upon which the lever swings. This spring is not shown in the diagram, but is mounted in the same way as on the motor starters.

If it is desired to run the motor at its normal velocity, the lever *A* is moved around until it comes in contact with segment *G* and thus cuts out all the resistance in the circuit of the motor armature. If a still higher velocity is required, the lever is carried further ahead, so as to pass off the segment *E* and rest on one of the small contacts connected with the resistances *r*. In this way resistance is cut into the field circuit of the motor, and, owing to the reduced strength of the field, the speed of rotation of the armature is increased.

When lever *A* is moved to the extreme right-hand position, the motor will run at the highest velocity, and when *A* is on the first contact at the left, the speed will be the lowest. In either one of these two positions, or in any intermediate position, lever *A* is firmly held by the catch attached to *D* so long as current passes through the motor. If, however, the line current is interrupted from any cause, the magnet *C* loses its strength, *D* can no longer hold the catch against *B*, lever *A* swings back to the stop position, and there is no danger of injuring the motor armature if the line current is re-established.

For the controller shown in Fig. 203 the wiring connections are given in the diagram, Fig. 205. This controller, as already stated, is the same as Fig. 202, with the addition of means for stopping the motor quickly, which is effected by converting the motor into a generator, so that the momentum of the armature is absorbed in developing a current; in other words, the power given out by the armature as a generator acts as a brake to arrest the motion.

For this controller the operation is as follows: If the lever *A*, Fig. 205, is moved to the right from the position in which it is shown, so as to cover segment *F*, the main current which comes from wire *c* to *F* will pass through *A* to the contact *E*, upon which *A* may be resting; then through the resistances *r* to segment *G* and thus through wires *h* and *h'* to the motor armature, and from the latter through wires *b'* and *b* to the opposite side of the main line. If lever *A* rests on the first E contact at the left, the motor speed will be the lowest, while if it

ests at the extreme right side of $G$, the speed will be the high-
st, precisely as in the case of Fig. 204.

When $A$ is in the position shown, the circuit through the

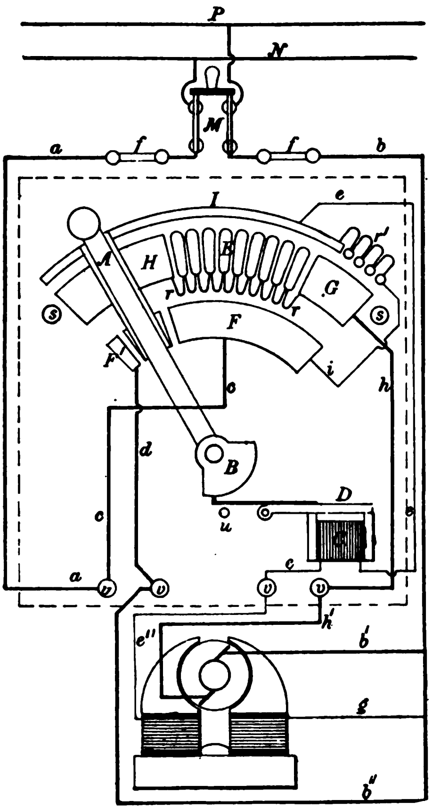


FIG. 205.

*mature of the motor* is broken, as the current from F canno
*ss in any way to G.* If $A$ is moved to the left so as to co
*tact F', then* this contact will be connected through the segr

*H* and the resistances *r* with segment *G*, and thus the circuit of the motor armature will be closed and any current generated in the latter will be forced through the resistances *r*. It will be noticed that when lever *A* is in the left-hand position, resting on *F′*, the circuit through the field of the motor is closed, as segment *F* is connected by wire *i* with the right-hand contact of the row connected with the resistances *r′*, so that the line current can pass to wire *e* and thus through magnet *C* to wire *e″*, and through the motor field to wire *g* and the opposite side of the main line.

If the contacts of the controller are arranged precisely as shown in Fig. 205, the current generated in the motor armature when *A* is moved to the left position will be such as the magnitude of the total resistance *r* will permit it to be. Under these conditions the motor may stop more quickly than desired, or not quickly enough. If the stop is not quick enough, the segment *H* may be made shorter and a separate contact provided to the left of it, this contact to be connected with any point of the resistance *r* which may be found necessary to effect a stop in the proper time. Or, if the stop with all the resistance *r* in the circuit is too rapid, an additional resistance can be cut into the circuit. The contacts and the resistances can be arranged so as to adjust the rapidity of the stop to suit any particular case.

Small circles *s s* are stops to prevent swinging lever *A* too far in either direction. Whenever it is desired to make a slow stop, lever *A* is returned to the position in which it is shown, but if a quick stop is desired, it is carried around to the left until it strikes the stop *s*. The spring that swings the lever back to the stop position is mounted upon the central stud around which the lever swings.

Whenever the motor is stopped for any length of time, the main switch *M* is opened so as to break the circuit through the field coils. The fuses *f f* protect the motor against a strong current, and magnet *C* protects it against sudden stoppage of current in the main line, so that the machine is as well guarded as if connected with an overload and no-voltage motor starter.

# CHAPTER XLI.

## Reversing Motor Controllers.

IN MANY cases it is desired to be able to run a motor in either direction, and for that purpose a reversing controller is required. Fig. 206 is a controller which is arranged to run the motor at full speed in either direction, but, if provided with resistance of sufficient capacity, may be used to obtain

FIG. 206.

different speeds by cutting resistance into the armature circuit. Fig. 207 shows another form of reversing controller, made by the same firm, the Cutler-Hammer Mfg. Co., with which a number of different speeds may be obtained in one direction, and two speeds when running in the opposite direction. Controllers of this type are used in cases where it is desired to run a

several speeds in the forward direction, which is the direction in which the motor is run most of the time, and at only one or two speeds when the motor is reversed.

Circuit connections for Fig. 206 are shown in Fig. 208. The current from main line *P* passes through wires *b* and *b'* to the upper binding post *v'*, and thence through wires *d'* and *d* to the left-hand contact *E'*. Through wire *g* the current reaches the motor field and thence passes through wires *e''* and *e'* to magnet *D*, through wire *e* to wire *c''*, to contact *u*, to wire *c'*, through *u'* to wire *c* and to wire *a*, which connects with the main line *N*.

FIG. 207.

The magnet *D* acts to hold lever *A* in any position in which it may be placed, precisely the same as the magnet *C* in the controllers explained in the last chapter. The lever *A* is divided into two parts, *A* and *B*, by an insulating section marked *t*.

If the main switch *M* is closed and the lever *A* is in the vertical position, the circuit through the motor field will be closed, as will be seen by following wire g; but the armature circuit will not be closed, as there is no connection between the contacts E E' and *F F'*. The contacts E E' are connected with each other by

wires *i i*, and contacts *F F′* are connected with *G G′* by means the wires *h h′*.

If lever *A* is moved to the right, the section above *t* will

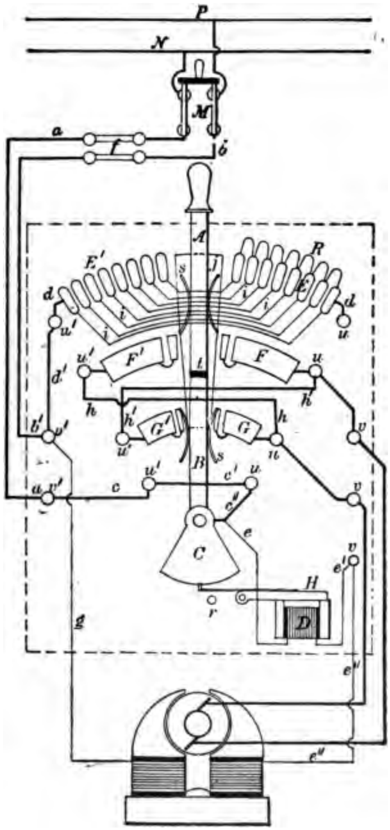


FIG. 208.

*nnect F with the contacts E,* and then the current from the E' *tact at the left* will pass through wire i to the E contact *extreme right* and through the resistance loops R unti'

reaches lever *A*. Through this lever the current will pass to *F*, to the small contact *u*, to binding post *v* and to the lower motor brush. Returning from the upper motor brush, the current will reach *G* and, through the lower section *B* of the lever *A*, will reach the stud around which the lever swings and with which wire $c''$ is connected. From this point through wires $c'$ and *c* the lower binding post $v'$ is reached, and thus wire *a*, which is connected with the *N* side of the main line.

In this case it will be observed that the current reaches the motor armature through the lower brush. Now, if the operating lever is moved to the left, it will be found, by tracing the circuit through the contacts *E* and $E'$, the connecting wires *i* and resistance loops *R*, that the current from the extreme left-hand $E'$ contact will reach lever *A* wherever it may be resting on the $E'$ contacts, will pass to $F'$, and thence through wire *h* will reach the upper motor brush, and will return from the lower brush through wire $h'$ to contact $G'$, and thence through section *B* of lever *A* to wire $c''$ and back to the *N* side of the main line through wires $c'$, *c* and *a*.

Thus it will be seen that if, when the operating lever is moved toward the right, the armature rotates clockwise, when the lever is moved to the left, the armature will rotate counter-clockwise; for in the first case the current will enter the armature through the lower brush, while in the second it will enter through the upper brush.

The piece *j* is not connected with the circuit, and is simply provided to form an even path for the lever to move over. The small contacts marked *u* and $u'$, four placed in a row on each side of the main contacts, are for the purpose of making a more perfect connection when the operating lever is in the extreme side position. The spring connectors marked *s s* press against these contacts when in the side position. The actual form of these connectors, and of the *u* and $u'$ contacts, is well shown in Fig. 206.

As in the two controllers described in the last chapter, the segment *C* is provided with teeth on its periphery, and the spring catch attached to the armature H of magnet D engages with these teeth to hold the operating lever in any position. As

this type of switch the lever swings in both directions, springs are placed around the stud that act to bring it to the central position when moved either one way or the other. The arrangement of these springs can be seen in Fig. 206.

For the controller shown in Fig. 207 the circuit connections are given in the diagram, Fig. 209. This controller, as already explained, is arranged so as to give several speeds in one direction, but only two in the other direction. The motor shown in this diagram is of the compound type, the shunt field coils being marked *S S* and the series coils *m m*. The magnet *D* acts in the same way as in Fig. 208. The shunt field current branches from wire *b* through wire *g*, and passes from the field coils to wire *e''*, up to the binding post *v*, to wire *e'*, thence through magnet *D* to wire *e* and segment *L*. The main current passes through wire *b* to the series field coils *m m*, through wire *b'* to binding post *v'* and thence to contact *I*. The lower motor brush is connected through wires *d'* and *d* with contact *G'*, and the upper brush is connected through wires *h'* and *h* with contact *G*. The *N* side of the main line is connected with the stud around which the operating lever swings, through wires *a* and *c*.

If the lever is moved to the right far enough to cover the first *E* contact, the current from *I* will pass through all the *r* resistance to *A*, thence to *F*, through wire *i'* to *G'*, to wires *d* and *d'*, and to the lower side of the motor armature. From the upper armature brush the current will return through wires *h'* and *h* to *G*, and through section *B* of the operating lever to wire *c*, to wire *a*, and to the opposite side *N* of the main line.

As the position of *A* is advanced toward the right, section after section of the resistance *r* is cut out and the motor speed is correspondingly increased. When *A* reaches contact *I* the normal motor speed is obtained, and if it is advanced still farther along *I*, the sections of the resistance *r'* are cut into the circuit of the shunt field coils *S S* and the speed of the motor is further increased. Thus it will be seen that as many changes in velocity may be obtained as there are *E* contacts, plus the contacts connected with the *r'* resistance in the field circuit.

*If the operating* lever is moved to the left, the motor is reversed, *as the F'* contact is connected with G, so that the curre[illegible] *from contact I, after* passing through all the *r* resistances to [illegible]

of the wires *n* and the corresponding *E'* contact, will, through *A*, reach *F'*. Then, through wire *i*, the current will pass to *G*,

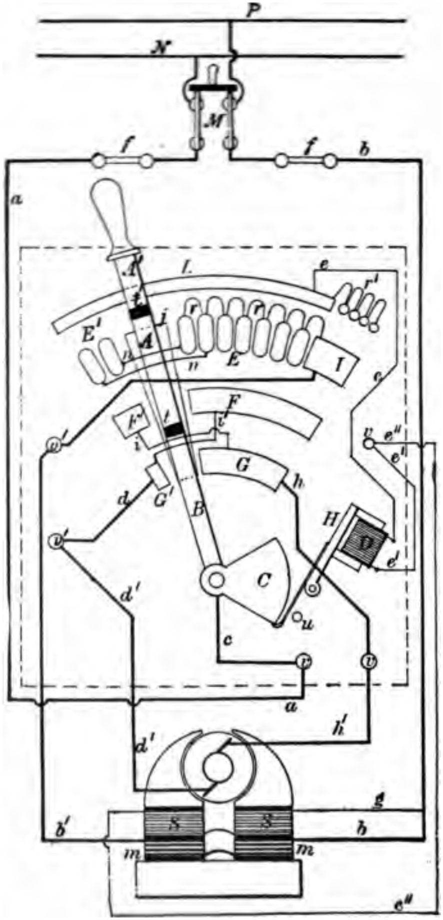

FIG. 209.

through wires *h* and *h'* to the upper motor armature bn the reverse of the direction when the operating

is moved to the right. If the lever is moved far enough to cover the first $E'$ contact, all the $r$ resistances will be left in the circuit of the motor armature, but if it is moved to the second $E'$ contact, one section of this resistance will be cut out. As may be readily seen, the second $E'$ contact may be connected with other $E$ contacts, so as to cut out two or more sections of the $r$ resistance, and thus give a greater difference between the two speeds obtained in the reverse motion. The upper end $A'$ of the operating lever is connected with the lower section $B$, so as to keep the shunt field circuit closed when the lever is moved to the stop position—*i. e.,* the position in which it is drawn.

## CHAPTER XLII.

### Motor Controllers for Printing Presses.

IN MANY cases it is desired to have the controller so arranged that the motor may be stopped quickly from several different positions. For such service it is evident that the simple arrangements heretofore shown cannot be used, because,

FIG. 210.

*with them,* the motor can be controlled from only one position and that is the place where the controller is located. In operation of a printing press, the work being done has

observed from several different positions, and the observers at any of these points should be able to stop the machine instantly if anything goes wrong.

The controller shown in Fig. 210, made by the Cutler-Hammer Co. for printing press service, is arranged so that, while the motor is started by the movement of the controller lever, it can be stopped by simply pressing a push button located at any desired point, and there may be any number of these buttons located wherever they may be required. To accomplish this result, the main switch of the controller is arranged so as to be actuated by a magnet. When a current is passed through the coil of this magnet, the switch is closed and the motor is properly connected with the main circuit.

When the current through this magnet is interrupted, the main switch is opened and thus the motor circuit is broken. The circuit through the coil of the switch-operating magnet is extended so as to include all the push buttons by means of which the motor is to be stopped. These buttons are connected so as to keep the circuit normally closed, but when any one of them is depressed the circuit through the switch magnet is opened, and the switch then opens the motor circuit.

In Fig. 210 the magnetic main switch is seen at the lower end of the panel, a little to the right of the center line. The small magnetic switch to the left of this is an overload device, to open the circuit in case the current becomes too strong. The two incandescent lamps on top of the controller are used to reduce the strength of the current that passes through the magnet of the main switch after the latter has been lifted into the closed position. The magnet of this switch is of the solenoid type, and in these magnets the current required to lift the plunger when it is in its lowest position is much greater than that necessary to hold the plunger up after it has been raised to its highest position. By cutting the two lamps into the magnet circuit, after the switch has been closed, the current strength is greatly reduced; thus energy is saved and, in addition, the magnet coil is prevented from becoming overheated.

Fig. 211 shows the general arrangement of this controller. The magnet of the main switch is shown at B; when current passes through this magnet, the plunger j is raised and the co

nector attached to its lower end joins the contacts $v\,v$, thus ing the circuit through the motor. When the current throu

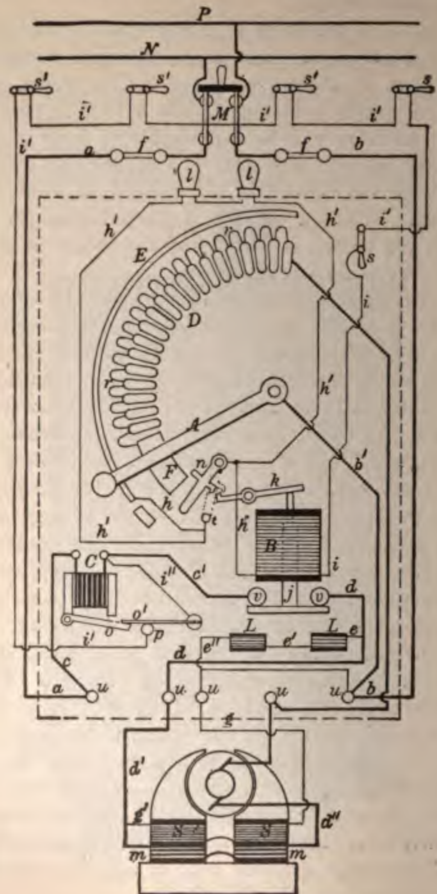


FIG. 211.

is shut off, the plunger $j$ drops, thus opening the circuit th he motor armature. The small switch $n$ is in the positi

cated in dotted lines, when the circuit through $B$ is open, and rests upon the contact $t$. The catch $k$ holds $n$ in this position and a spring acts to pull it into the position in which it is shown.

In the circuit $i'$ the switches $s' s'$ represent the push buttons that are located at the several points from which it is desired to stop the motor. If all these $s'$ switches are closed, the closing of switch $s$, located on the controller panel, as shown in Figs. 210 and 211, will close the circuit through $B$, and thus connect $v\,v$ and establish the circuit through the motor. The upward movement of $j$ will cause its upper end to strike $k$ and release switch $n$, thus breaking the connection with $t$. When $n$ rests on $t$, the wire $h$ is in direct connection with $h''$ through switch $n$, but when $n$ is released and swings to the position in which it is drawn, the wire $h$ is disconnected from $h''$, and the current in the latter must pass through the two lamps $l\,l$ to reach wires $h'$ and $h$. From this it will be seen that until the upper end of $j$ strikes $k$ the lamps $l\,l$ are short circuited by the switch $n$, but as soon as this switch is released and swings away from $t$ the lamps are cut into the circuit, and thus the current passing through $B$ is greatly reduced, but not until $j$ has been raised so as to connect the two contacts $v\,v$.

Whether $j$ is down or up, the circuit through $B$ is closed, providing all the switches $s'$ and $s$ are closed, for, as will be seen, if we follow wire $b$ to lever $A$, we shall reach segment $E$, with which wire $h$ is connected, and if $n$ rests on $t$, the current will pass to $h''$ and through $B$ to wire $i$, through switch $s$ to wire $i'$ and to contact $p$. From this contact, through spring $o'$, the current will pass to wire $i''$, thence through magnet $C$ to wire $c$, and finally to wire $a$, which is connected with the opposite side of the main circuit.

When the main controller lever $A$ is in the stop position, it presses switch $n$ over onto contact $t$, thus cutting out the two lamps $l\,l$. If $A$ is not in the stop position, switch $n$ will not be pressed over onto $t$, and if such is the case, the current passing through $B$ will not be strong enough to lift the plunger $j$. The result of this is that, if the current in the line should fail while the motor is running, and lever $A$ is resting on one of the contacts $D$, the circuit will be opened through the motor on account of the current through $B$ dying out, and as B cannot lift j with

the two lamps *ll* in circuit, the motor circuit cannot be closed again until *A* has been returned to the stop position and has forced *n* over the contact *t*. In this way the motor is protected from the danger of being started with all or a large portion of the armature resistance *r* cut out of the circuit.

Magnet *C* is for the purpose of protecting the motor against an excessive current due to an overload. When the main current, all of which passes through *C*, becomes strong enough, the

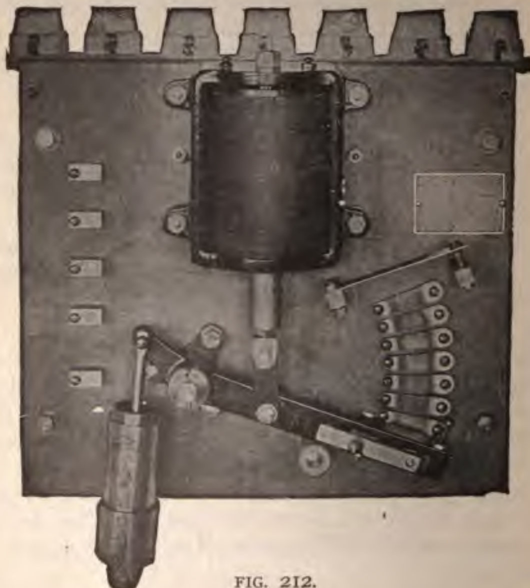

FIG. 212.

armature *o* is lifted and thus breaks the connection between *p* and the spring *o′*. As will be seen, this break opens the circuit *i″*, in which the magnet *B* is included, and causes the main switch to be opened by the dropping of plunger *j*. The two coils *LL* are magnetic blowouts and are provided to blow out the sparks formed between the contacts *v v* and the connector carried by *j*, when the switch is opened.

Fig. 212 shows a form of magnetic controller used to operat

motors that are stopped and started automatically, or are actuated from a distant point, or in which it is desired to simplify the operation of starting. The diagram, Fig. 213, shows the way in

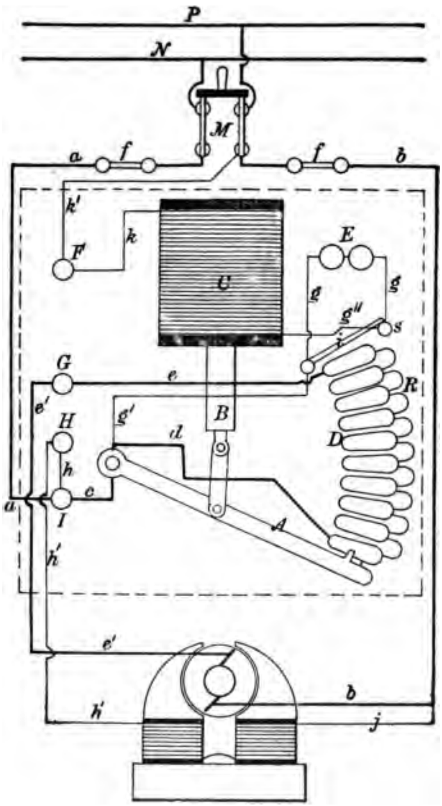


FIG. 213.

which the starter is connected when used for the purpose of simplifying the operation of starting. With this arrangement *all the attendant has* to do is to close the main switch M and th *starter does the rest.* As soon as *M* is closed, the circuit thro

the motor is closed; through wires $k'$ and $k$ the current passes to magnet $C$, through wire $g''$ and switch $i$ to the wire $g'$, and thus to wires $c$ and $a$ and the opposite side of the main line.

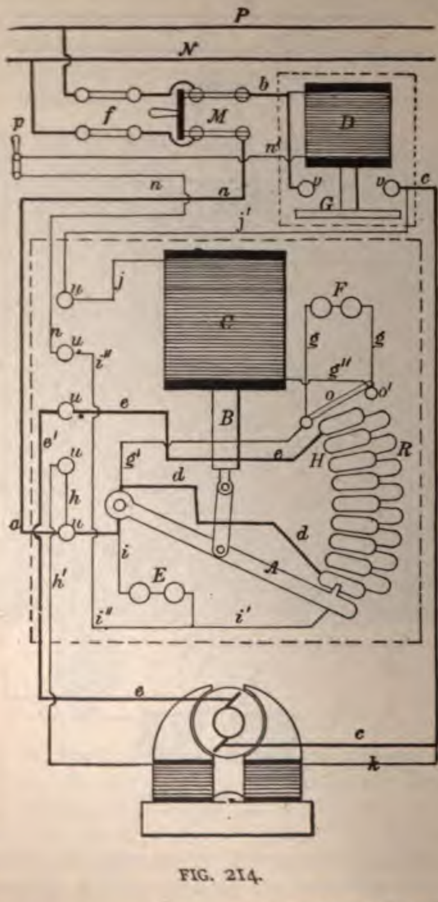


FIG. 214.

As soon as magnet $C$ is energized, it draws up the plung
nd thus swings lever $A$ over the contacts D and cuts out

resistance in the circuit of the motor armature. The dashpot shown in Fig. 212 opposes the pull of magnet *C* and thus regulates the speed at which *A* is moved over the contacts. When *A* reaches the top position, it strikes the small switch *i* and opens the circuit with contact *s*, thus cutting in the two lamps indicated at *E*, or any other suitable resistance, so as to reduce the current passing through *C*.

Fig. 214 shows how this controller is arranged to be actuated from a distance. In this case a magnetic main switch *D* is provided, the circuit through which is opened and closed by a small switch *p* located at any point desired. When *p* is closed, the current passes through *D* to wire *n'*, and to wire *n*, to wire *i''*, and thence to wire *i'*, which connects with a contact upon which lever *A* rests. Through *A* the current passes to wire *a* and to the opposite side of the main line.

As soon as the current passes through *D*, it lifts its plunger, and thus the connector *G* joins the contacts *v v* and closes the circuit through the motor. The operation of magnet *C* will now be the same as in Fig. 213. As soon as *A* moves upward, it passes off the contact with which wire *i'* is connected, and then the current passing through *D* has to flow through the resistances at *E* to reach the opposite side of the line, and in this way the current through the main magnet *D* is cut down immediately after the connector *G* has been raised into position. As in Fig. 213, when *A* reaches the top position it opens the switch *o* so as to cut the resistance *F* into the circuit of *C*.

This type of motor starter is used to operate automatically pumps that deliver water into a tank, where it is desired that the motor be stopped when the water reaches a certain level in the tank, or when the pressure reaches a certain point. In the first case, the switch *p* is actuated by a float in the tank, and in the second case it is actuated by a pressure regulator.

## CHAPTER XLIII.

### Motor Starters with Electromagnetic Switches.

MOTOR starters of large size are made not only in the forms shown in previous chapters, but also with separate switches that are magnetically operated for making the various changes in the circuit connections. Starters and controllers of this type are more elaborate and expensive than the designs in which the various circuit combinations are effected by the movement of a single switch lever that swings over a row of contacts, but to offset this increased cost, the separate switch construction gives greater wearing capacity and offers less liability to developing short circuits.

In a starter such as is shown in Fig. 211, it can be easily seen that, if the current handled amounts to several hundred amperes, there is danger of seriously damaging the contacts *D* if the lever *A* fails to make a good connection with them as it swings upward; and in descending the sparking will be quite severe unless there are a large number of contacts, so as to divide the resistance *r* into so many sections that the voltage required to drive the current through each one is very small.

When a switch of this type is new, if it is properly constructed, there is no difficulty in obtaining perfect contact for all positions of the lever *A*, but the wear upon the rubbing surfaces will not be uniform and, as a result, in the course of time some of the *D* contacts will be lower than the others. This unevenness will cause the sparking to increase when the lever *A* swings downward, and the increase in sparking will result in more rapid wear, thus producing still greater irregularity in the surface. Unless this inequality in wear is remedied by truing up the surface of the contacts, a time will come when the sparking at some point will be great enough to burn them out.

Owing to these facts, the independent switches which are capable of withstanding harder usage are considered by many to be preferable, notwithstanding their greater cost. There e many designs of independent switch motor controllers and rters, some being comparatively simple and others very elab-

orate. One of several designs made by the Cutler-Hammer Co. is shown in Fig. 215, and the diagram of the circuit connections is given in Fig. 216. The switch in the lower left-hand corner is the main switch which opens and closes the motor circuit. The switch in the upper left-hand corner controls the circuits through the four magnets of the four remaining switches.

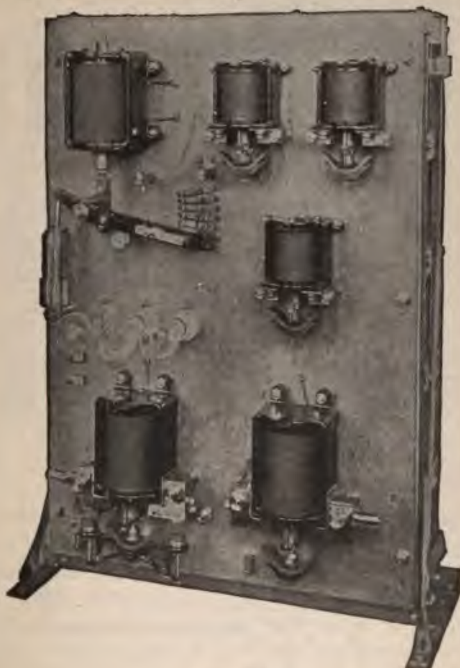

FIG. 215.

Each one of these switches, when actuated by its magnet, cuts out a portion of the starting resistance in the armature circuit.

As will be noticed, the starting resistance is cut out in four sections, while with switches of the types shown in previous chapters it is cut out in three or four times this number of sections. It is generally considered that the greater the number of

sections into which the resistance is divided, the smoother will be the acceleration of the speed of the motor in starting. This

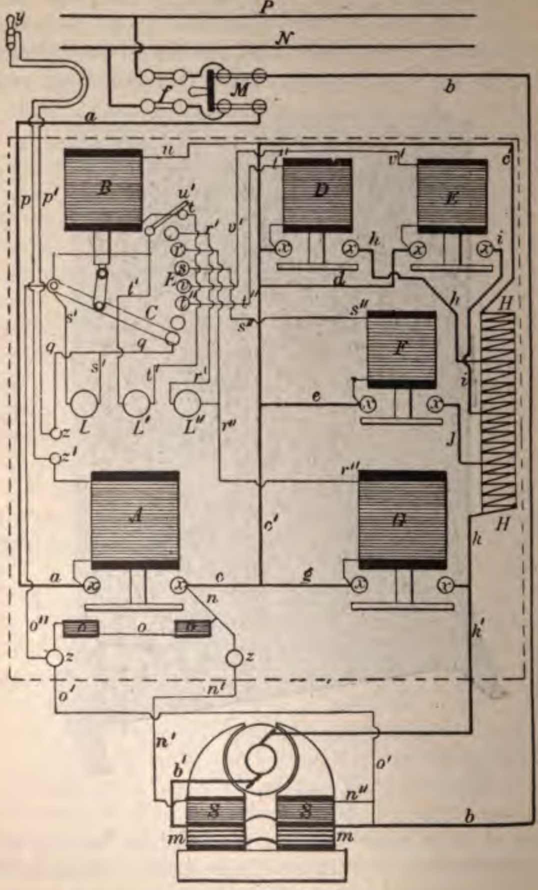


FIG. 216.

conclusion is true theoretically, but in practice it is found that the difference in the smoothness of the acceleration when t

number of sections into which the resistance is divided is four or five, or double or triple this number, is so slight as not to be noticeable. The fact is that no violent change in the speed of the motor can be effected unless nearly all the starting resistance is cut out at once, because the inertia of the armature and other moving parts resists any sudden change.

In starters such as that shown in Fig. 211 the number of *D* contacts is made large, not for the purpose of securing smooth acceleration of velocity, but to reduce the sparking.

In a starter such as is shown in Fig. 215, the only switch at which there is any tendency to spark heavily is the main starting switch, in the lower left-hand corner. When the motor is stopped, this switch opens the main circuit and, if the load on the motor at the time is large, the sparking may be severe. To reduce this sparking to the lowest point, magnetic blowouts are provided. The general operation of the starter can be well understood from the following explanation of the diagram, Fig. 216:

When the main switch *M* is closed, the circuit from the *N* side of the main line passes through wire *a* to magnet *A* of the starting switch. From magnet *A* the circuit extends to binding post *z′* and thence through wire *p* to the small switch *y*. By means of this switch *y*, which may be located at any desired point, the operation of the starter is controlled; for, as can be seen, if *y* is open, the circuit is broken, while if it is closed, the circuit continues through wire *p′* to post *z*, then through wire *q* to lever *C* of the *B* switch, to wire *o″*, to wire *o′*, and thence to the opposite side of the main line through wire *b*.

This circuit being established by the closing of switch *y*, the magnet *A* of the starting switch will draw up its plunger and thus connect the contacts *x x*. Then the main circuit through the motor will be from wire *b* through the series field coils *m m* of the motor, through the motor armature to wire *k′*, through the starting resistance *H H* to wire *c′* and wire *c*, and thence through the connector of switch *A* to wire *a* and the opposite side of the main line.

At the instant this circuit is closed by the closing of the starting switch *A*, a current will pass through wire *u* to magnet *B* out through contact *t* to the small switch *u′*, thence to the st

around which $C$ swings, and through wires $o''$ and $o'$ to wire $b$ and the main line $P$. Magnet $B$ will now begin to draw up its plunger and thus swing lever $C$ over the contacts $E$, the speed of the movement being regulated to any desired point by adjustment of the dashpot seen in Fig. 215.

Circles $L$, $L'$ and $L''$ represent incandescent lamps arranged so as to be cut into the circuits of the magnets $A$, $B$ and $G$ after these have raised their plungers to the top position. The circuits through the other three switch magnets are opened after they have performed their parts in the operation of starting the motor. When $C$ is in the position shown, the circuit of magnet $A$ from binding post $z$ is through wire $q$ to $C$ and thence to $o''$, but when $C$ is moved to the second $E$ contact, wire $q$ is disconnected, and the circuit is then made through wires $s' s'$ and lamp $L$, thus cutting resistance into this circuit and reducing the strength of the current that passes through $A$. For every other position of $C$ above this, the circuit of $A$ is through wires $s' s'$ and lamp $L$.

When $C$ moves up as far as contact $t''$, the circuit through magnet $D$ will be closed through wire $t''$. The plunger of this switch will then be raised, closing the circuit between wires $h$ and $c'$ and thereby cutting out the top section of the starting resistance $H H$. When $C$ advances to contact $v$, the circuit through magnet $E$ will be closed through wire $v'$, and the plunger of this switch will be raised, connecting the wires $i$ and $d$ and cutting out the upper two sections of the starting resistance. When $C$ passes onto $v$ it opens the circuit through $D$ and the plunger of this magnet drops, but this does not matter at this stage, as switch $E$ now closes the circuit between wires $i$ and $d$.

When $C$ reaches the contact $s$, the circuit of magnet $F$ is closed through wire $s''$, and the lifting of the plunger of this magnet closes the circuit between wires $e$ and $j$, thus cutting out the upper three sections of the resistance $H.H.$ When $C$ passes onto $s$, the circuits of magnets $D$ and $E$ are both opened. When $C$ reaches contact $r$, the circuit through magnet $G$ is closed through wire $r''$, and at the same time the circuit of magnet $F$ is opened. Closing the circuit of $G$ lifts the plunger and connects wires $g$ and $k$, thus cutting out the whole of the starting resistance $H H$.

When this position is reached, the three magnets, D, E and ; are cut out of the circuit, as they are no longer require

since magnet $G$ makes the proper circuit connection. When $C$ reaches the top contact, the lamp $L''$ is cut into the circuit of magnet $G$ through the wire $r'$, and lamp $L'$ is cut into the circuit of magnet $B$, by a projection on $C$ which actuates the small switch $u'$, thus breaking the connection with contact $t$ and forcing the current to pass through wires $t'$ $t'$ and lamp $L'$.

From the foregoing, it will be seen that the magnetic switches $D$, $E$ and $F$ are rendered active only during the short interval of time when they are used to cut out their respective sections of the starting resistance $H$ $H$, and that immediately after they have performed their work the current through their magnets is cut off. When the motor is running at full speed, the magnets $A$, $B$ and $G$ are energized, but one of the lamps $L$ is cut into each circuit, so that the current passing through the magnets is small, just strong enough to hold the plungers in the upper position.

When the operating switch $y$ is opened, the circuit through the magnet $A$ of the starting switch is opened and the plunger drops, thus opening the main circuit through the motor. As soon as this circuit is opened the circuits through the magnets $B$ and $G$ are opened. As switch $A$ opens the main motor circuit, there may be considerable sparking between the connector and the contacts $x$ $x$, if the motor is carrying a heavy load at the time, but this spark is broken by the action of the blowout magnets $o$ $o$ which are provided for that purpose. In any case, the sparking cannot be injurious, because the motor is so connected permanently in series with the armature that the circuit through the shunt field coils $S$ $S$ is never opened. That such is the case can be readily seen by tracing the motor circuit from the upper armature brush. This circuit runs through wire $k'$ to resistance $H$ $H$ and into wire $c'$, which connects with wire $c$, the latter connecting with wire $n$ to binding post $z$ and from here through wire $n'$ to the left field coil $S$ and out to wire $n''$, thence through the series coils $m$ $m$ to wire $b'$ and the lower motor armature brush and through the armature to the starting point. This is the connection with all the switches either opened or closed; hence, unless the current passing through the motor is very strong when the machine is stopped, the sparking at the contacts of switch $A$ will be small.

# CHAPTER XLIV.

## Testing Electric Motors.

TO BE able to make a test of a motor in any place and under any conditions, it is necessary to understand the principles upon which the test depends. These principles are simple and easily understood, and it is proposed to explain the subject fully in what follows.

In making a test of a motor, we can find out a number of things. We can ascertain the amount of electrical energy it absorbs, and also the amount of work it delivers at the pulley. By deducting the last amount from the first, we can find what amount of energy is lost in transforming the electrical energy supplied to the motor into the mechanical energy it delivers at the pulley, and if we divide the latter energy by the electrical energy, we shall obtain the commercial efficiency of the machine. We can not only find out the proportion of the electric energy that is lost in the motor, but we can go further and ascertain how it is lost, what proportion is lost in the armature, what proportion in the field, and what proportion in other ways. We can, in addition to determining the amounts of energy absorbed and delivered, find the difference in efficiency of the motor for different percentages of load.

Motors can be tested in two ways—by purely electrical methods, or by a combination of mechanical and electrical methods. In this chapter we will explain the purely electrical methods.

Electrical tests can be made in a simple manner and in a few minutes' time, but such are only accurate enough to give a fair idea of what the machine is doing. The simplest test of all for direct-current motors is made with a single ammeter, to determine the efficiency of the motor and also the power it is developing. For this test the ammeter is connected in the motor circuit, so as to measure the total current passing through the machine. The way in which the instrument is connected is fully explained in Chapter XXIII, Part I.

*Having* connected the ammeter, the belt is thrown off and the motor started up running light. When the starter has be

turned to the last point, and the armature is running at full speed, the ammeter is read, and the number of amperes indicated is noted. The motor is now stopped, the belt is put on, the machine started and full load applied. We now read the instrument for the second time.

Suppose that the first reading is 10 amperes, and the second is 100 amperes, then we know that to run the machine light 10 amperes are required, and that to drive the full load the current must be increased by 90 amperes. From this we might conclude that the electric current available to do work was 90 amperes, and that lost in the motor was 10, but this conclusion is not strictly correct. The truth is that, when the machine is driving the full load, the loss in it is greater than when it is running light. For the present, we can assume that when full load is on, it requires 12 amperes—that is, an increase of 2 per cent over the no-load loss—to overcome the loss within the machine, and the current available for doing work is 88 amperes, so that the efficiency of conversion is 88 per cent; that is, we take into the motor electric energy equal to 100 and deliver power, or mechanical energy, at the pulley equal to 88 per cent.

This test, however, gives no idea of the amount of power the motor develops, because the number of amperes alone is no measure of electrical energy. To find the amount of electrical energy, we must know the potential or voltage of the current. If we have a voltmeter, we can connect it with the motor as explained in Chapter XXIV, Part I, and then by multiplying the volts indicated upon the instrument when connected with the motor terminals, by the current in amperes, we shall get the number of watts of electrical energy given to the motor.

Suppose that the voltage is 100, then the watts when the motor is running loaded and the current is 100 amperes will be $100 \times 100 = 10{,}000$. This is the total amount of electrical energy absorbed, but the portion of this energy that is transformed into useful mechanical energy and delivered at the pulley is 8,800 watts, which is the product of 88 amperes by 100 volts. The energy lost in the motor is 1,200 watts. To find the amount of power delivered at the pulley, in horsepower, we divide the 8,800 watts by 746, this number of watts being equal to 1 horsepower. If the division is made, it will give nearly 12 horsepower.

If we are not provided with a voltmeter, we can come fairly near the real amount of energy by going by the voltage of the line; that is, the voltage it is supposed to have. Thus, if the motor is connected with the circuit from a lighting station that is operated at 220 volts, we can take this figure as approximately correct, and get an indication of the amount of power which will not be more than 6 per cent out of the way, because the actual voltage is not likely to be more than 230 nor less than 210.

In order to make an accurate test, we first ascertain the resistance of the field coils of the motor and also that of the armature. The resistance of these parts will not be the same when

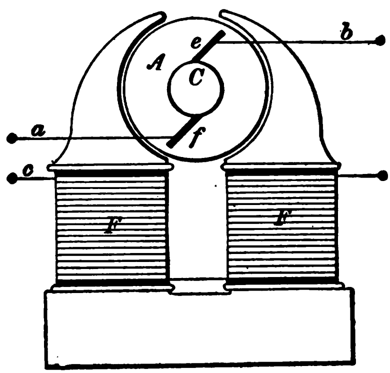


FIG. 217.

the wire is cold as when it is hot; the higher the temperature, the higher the resistance; hence, it is best to run the motor 2 or 3 hours before measuring the resistance, so as to get the armature and the field coils heated up to the temperature that they attain in actual running.

To test the resistance of the coils, the terminals are disconnected from each other, as illustrated in Fig. 217. The best way to test the resistance is by means of a galvanometer and bridge, as explained in Chapter XXVII. The combination of a galvanometer and a bridge is commonly called a testing set, and by many it is known by no other name.

If a testing set is not at hand, the resistance of the arma-

ture and field can be ascertained by means of a voltmeter and an ammeter. This method will enable us to find the resistance of the field with a fair degree of accuracy, but for measuring the resistance of the armature it is practically useless, unless the voltmeter is calibrated to measure very small voltages, say from 5 volts down to a small fraction of 1 volt.

To measure the resistance of either the armature or the field coils by means of a voltmeter and an ammeter, the terminals are connected with the instruments and with a battery or other source of current, as shown in Figs. 218 and 219. In both

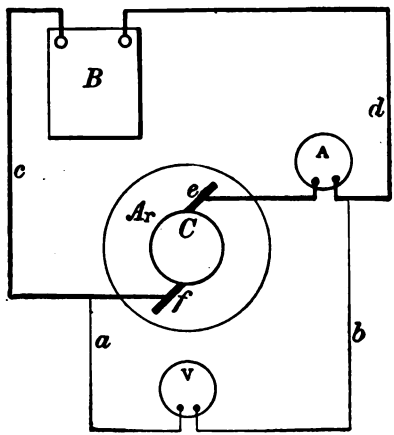


FIG. 218.

of these diagrams *B* represents a battery, which, for testing the armature, should be a storage battery capable of giving a strong current, fully as much as is required to run the motor up to full power. The voltage should not be more than 3 per cent of that required to operate the motor. For testing the field coils, the battery need not give a current of more than an ampere, and in most cases considerably less, but the voltage should be about one-half that for which the motor is designed. Such a voltage cannot be obtained with batteries of any kind without connecting a large number of them in series, say from thirty to seventy

From the foregoing, it will be seen that it is not convenient to use batteries either for armature or field coil tests, and the best way is to use the same current that runs the motor, introducing a sufficient amount of resistance to cut it down to the required strength.

In Figs. 218 and 219 the connections are shown for testing the armature, but the connections for testing the field are precisely the same.

For the field the resistance can be found with a fair de-

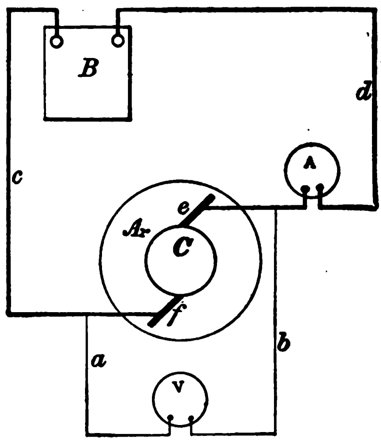


FIG. 219.

gree of accuracy by this method, because, as this resistance is high, the voltage with a small current will be high. To illustrate, suppose that we connect the field as shown in these diagrams, and find that the current is 2 amperes, and the volts 240; then, by dividing the volts by the amperes, we shall get the resistance in ohms, and 240 divided by 2 gives us 120, which is the number of ohms resistance in the field coil.

As the resistance of the armature is very low—generally a *few hundredths* of an ohm—even with a strong current the voltage *is low*. Thus, if the resistance of the armature is, say, 0.02 ohm, and we pass through it a current of 100 amperes, th

volts will be only 2. If the voltmeter which we have is one that indicates 100 or more, we shall be unable to determine anything positive about the armature resistance with it, for it is not practicable to measure fractions of a volt with such an instrument. If, however, we have a voltmeter that will measure hundredths of a volt, and indicate as high as 5 volts, we can use it and determine the armature resistance fairly well, following the same rule as for the field coils—that is, divide the volts by the amperes of current, and the quotient will be the resistance in ohms.

By these methods the resistance of the field coils can be measured to within less than 1 per cent, but that of the armature cannot very well be ascertained much closer than 2 or 3 per cent. By the use of the galvanometer and bridge, the resistance can be determined to within a very small fraction of 1 per cent, say the one hundredth part of 1 per cent, so that it is by far the best method of testing, and generally there is no difficulty in obtaining a testing set.

In measuring the armature resistance by means of a voltmeter and an ammeter, measurements should be made with the instruments connected as shown in both the diagrams, and then the average of these should be taken. As can be seen at once, if the voltmeter is connected as in Fig. 218, it will indicate the voltage absorbed by the ammeter as well as by the armature, and although the resistance of the ammeter is very low, its presence in the circuit will increase the voltage reading, on account of the strong current used. If the connections are made as in Fig. 218, the ammeter will indicate the current passing through the voltmeter as well as that passing through the armature, and if the instrument is intended for very low voltages, the current passing through it may be sufficient to slightly increase the reading of the ammeter. Generally, however, this will not be the case, so that in most cases a single reading with the instruments connected as in Fig. 218 will be sufficient.

Having found the resistance of the field coils and that of the *armature,* we can determine the loss in these two parts *separately,* and the accuracy with which we determine these two losses will depend upon the accuracy with which we hav

measured the resistance. Suppose that the resistance of the field coils is 100 ohms, and that current is supplied to motor at a voltage of 200, then by dividing this voltage by the field resistance we find that the current passing through the field coils is 2 amperes, and multiplying this current by the voltage, we get 400 watts as the energy absorbed in the field coils; and this loss will remain the same no matter whether the motor is running light, or fully loaded.

Armature current will increase with the load, so that the loss due to the resistance of the armature coils will be small when the machine is running free, and will increase as the load increases. Suppose that the armature resistance is 0.02 ohm, and that, when the motor is running fully loaded, the armature current is 100 amperes, then the voltage absorbed by the armature at full load will be 2 volts, being the product of the resistance by the current strength. Multiplying this voltage by the current, we get 200 watts as the loss due to armature resistance when running with full load.

If we now make a test in the manner first explained—that is, by running the motor light and then fully loaded, and take the difference in the current strengths for the two cases—we shall find that it will be more than what is represented by the field coil and armature resistance losses combined. This difference represents the loss that is due to mechanical friction, and also magnetic friction. The mechanical friction is the bearing and armature brush friction and also the resistance of the air rubbing against the rotating parts. The magnetic friction is that within the iron caused by the action of the particles upon each other as the metal is magnetized and demagnetized. This friction is called "hysteresis."

It is difficult to separate the mechanical friction loss from the magnetic friction loss, or hysteresis loss, but generally they are about equal and are practically the same whether the motor is running light or loaded. Assuming this to be the case, we then have three losses that are constant, namely, the field coil loss, the mechanical friction loss, and the hysteresis loss. Now, if we run the motor light and measure the current, we know that of this current a certain amount passes through the field oils, and the balance goes through the armature, one-half b

ing absorbed by mechanical friction and the other half by hysteresis. The loss in the armature due to the passage of the current through it will increase in proportion to the square of the current.

With these facts determined by our tests, we can draw a diagram such as is shown in Fig. 220, in which the figures on the right-hand side indicate percentage of work utilized or lost, and those along the bottom indicate percentage of rated load.

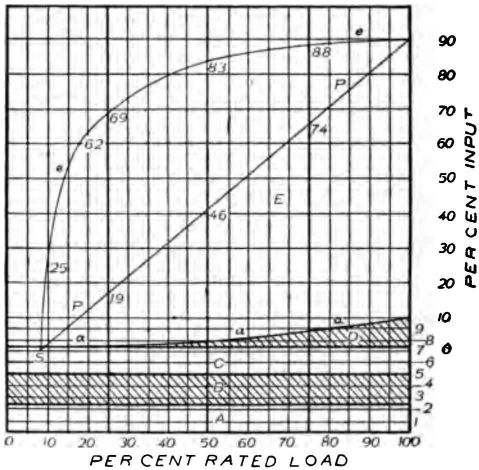


FIG. 220.

In this diagram the lower area, marked *A*, represents the energy lost in the field coils, which, as we have shown, is the same for all loads. The shaded area above this, marked *B*, represents the hysteresis loss, which is also practically constant; in fact, it is absolutely constant at the same speed. The unshaded area, *C*, represents the mechanical friction loss, which is also practically constant. The shaded section above this, marked *D*, which begins at nothing on the left-hand side and becomes wider as it approaches the right-hand side, is the loss due to armature resistance, which is insignificant when the load is light, and i

creases with increasing load. Thus we find that, if the motor is running without load, the total loss is about 7½ per cent, and when the full load is on it increases to 10 per cent.

If the current absorbed by the motor running at full load is 100 amperes, according to this diagram it will require 7.50 amperes to run light, and at this point, as it does no work, all the energy it receives is lost; hence, the efficiency is zero, and the work done is zero. The curve *e e* represents the efficiency for all loads and, as will be seen, it is 25 per cent for 10 amperes, 62 per cent for 20 amperes and continues to increase, being 88 per cent for 75 amperes, and 90 per cent for 100 amperes. The line *P P* shows what portion of the total capacity of the motor is given with different strengths of current, this being zero for 7.5 amperes, 19 per cent for 25 amperes, and 46 per cent for 50 amperes. These are percentages of the full load capacity, which is 90 per cent of the electrical energy absorbed. To obtain the curves *e e* and *P P*, or the percentage figures marked upon them, all that is necessary is to add to the 7.5 per cent loss with no load the armature loss obtained by multiplying the square of the current by the armature resistance. The upper part of this diagram is drawn to a smaller scale, vertically, than the lower, so as not to make it too high. The No. 7 line is the zero line for the upper part of the diagram and, as will be noticed, curves *e e* and *P P* start from points on this line; to be strictly accurate, they should start from curve *a a*.

## CHAPTER XLV.

### TESTING ELECTRIC MOTORS—*(Continued.)*

IN THE last chapter we explained several methods of testing electric motors by means of electrical instruments. Such tests can also be made by using combinations of electrical instruments and mechanical devices. A common way of making tests by a combination of electrical and mechanical means is illustrated in Fig. 221. In this diagram, *F* represents the motor to be tested, *B* a fan blower that is driven by the motor, and *D* a dynamometer that is interposed between the fan and the motor to measure the power transmitted.

Strictly speaking, the dynamometer *D* does not measure the power transmitted; it simply indicates the force or pull on the belt, and to obtain the power it is necessary to multiply this by the velocity of the belt. Some dynamometers are calibrated to indicate the pull upon the belt, so that to obtain the power in foot-pounds the velocity at which the belt travels in feet per minute must be multiplied by the reading of the instrument. Then, if this product is divided by 33,000, the horsepower is obtained. In other dynamometers, the calibration is such that the number of revolutions per minute is given instead of the belt speed. It is necessary, therefore, before making a test, to ascertain how the dynamometer is calibrated; the name plate on the apparatus usually gives the required information.

Starting from the top of the diagram (Fig. 221), the wires *P N* are connected with the supply circuit, and the ammeter *A* and voltmeter *V* enable us to measure the strength and voltage of the current, the product of these two readings giving the power, as has been explained in previous chapters. By adjusting the outlet gate of the fan *B*, the power required to drive it can be increased or decreased as desired, so that from the dynamometer *D* we can take measurements of the power delivered, and from the instruments *A* and *V* can determine the electrical energy absorbed for full load or for any portion of full load that we may desire. In this way we can determine the relation between er

ergy received and energy delivered, or the efficiency of conversion, for several proportions of load.

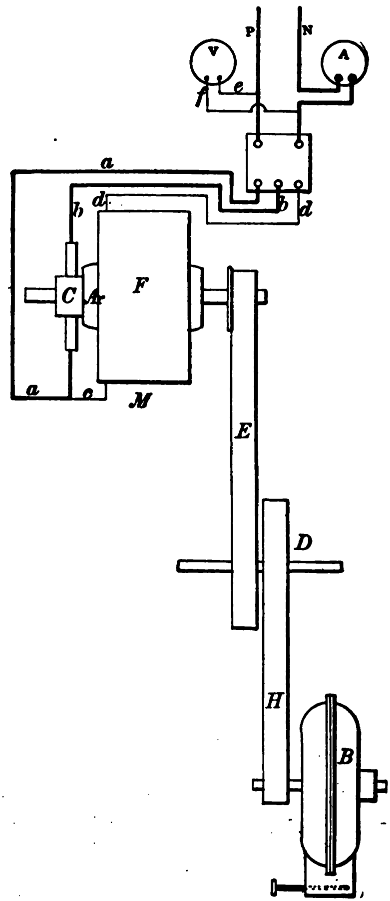


FIG. 221.

In order that a test made in this way may be at all accur it is necessary that the indications of the instruments A ar

and of the dynamometer *D,* as well as the velocity of *D,* or of the belt, as the case may be, be taken at the same instant, or as nearly so as possible; otherwise the results may be far from correct. This liability of error from not taking the readings of the instruments at the same instant arises from the fact that the voltage of the current cannot be depended upon to remain absolutely constant, and any variation in it will cause a material difference in the amount of energy supplied to the motor.

As there is a possibility of making an error in reading the indications of the ammeter and the voltmeter, and as both may not be read at the same time, it is advisable to use a wattmeter as a substitute for these two instruments if one can be obtained. This substitution of one instrument for two reduces materially the liability of making mistakes. A still better plan is to use an integrating wattmeter which will give a true record of the energy that passes through it during a given period. If such an instrument is used, and the test is made to cover a run of 1 hour, the record of the instrument will show the average power during the run. If, during this time, the indication of the dynamometer is taken every minute, we shall have 60 readings from which the average can be obtained by the simple process of adding them all together and dividing the sum by 60. To make the test as accurate as possible, the gate in the end of the blower should be undisturbed during the run, so as to maintain the power practically constant.

By a test made in the manner just explained we get the power delivered by the motor, and the energy absorbed, under actual running conditions, and from these two amounts we can obtain the running efficiency of the motor, as well as its actual capacity in horsepower. But we cannot separate the various losses in the motor, as may be done by means of the purely electrical tests explained in the last chapter. The blower *B,* as will be readily understood, may be replaced by any other kind of machine, or by a number of machines. Thus if the motor is in actual service, the dynamometer *D* can be connected between the motor and the main shaft, the belt from the motor running to the dynamometer, and the belt from the latter to the line shaft. If a test is made of a motor in actual service, it is desirable that during the test the load be kept as nearly uniform as possible.

In many cases, where it is not convenient to use a blower or any other kind of machinery to absorb the power of the motor, if we have a second motor, it may be used as a generator, and be driven by the motor to be tested. Then, by measuring the electric energy absorbed by the motor, and that developed by the generator, we can ascertain the capacity and also the efficiency of the machine. For this kind of test the two motors are arranged as shown in Fig. 222, motor *M* acting as a motor receiving cur-

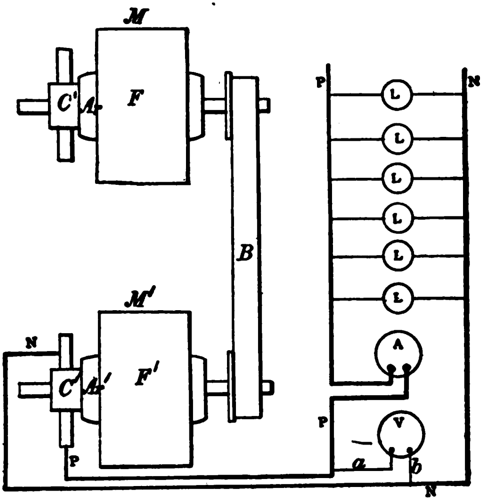


FIG. 222.

rent from the supply mains, while motor *M'* acts as a generator driven by *M* through the belt *B*. The current generated by *M'* can be utilized in a number of lamps as indicated, or it can be passed through another motor or through a resistance. The current supplied to *M* from the main circuit is measured in the same way as in Fig 221; that is, by the use of a wattmeter or an ammeter and a voltmeter. The current delivered by *M'* is measured in the same manner, the instruments A and V representing an ammeter and a voltmeter which may be replaced by a wattmeter if such an instrument is available.

If the two motors $M$ and $M'$ are of the same size and make, we may assume that they are of equal efficiency, and by taking one-half the difference between the energy absorbed by $M$ and that delivered by $M'$, we shall come very near the loss in each machine. This method will not give us a perfectly correct result because the current drawn from the supply circuit by $M$ will be stronger than the current delivered by $M'$, and the loss in $M$ will, therefore, be greater than that in $M'$; also the loss from slippage of belt is charged against the machines.

If we desire to make the division of the loss more accurately, we can do so by ascribing to each machine a portion of the loss proportional to the energy absorbed or delivered by it. For example, suppose that $M$ absorbs 10 kilowatts and that $M'$ delivers 8 kilowatts; then if the difference between them, which is 2 kilowatts, is divided into 18 parts, and 10 of these are given to $M$ and 8 to $M'$, we shall arrive at nearly the true result. Carrying this calculation further, we shall find that if $M$ loses 10 parts, the total electric energy it develops is 10,000 watts less 10 times $\frac{2,000}{18}$, or 1,110 watts, = 8,890 watts; from which we find that the efficiency of $M$ is about 89 per cent.

If the two machines $M$ and $M'$ are not of the same make, or if they are of different sizes, we can approximate the efficiencies of both by making one test with $M$ running as the motor and another test with $M'$ as the motor and $M$ as the generator. If there is a difference in the efficiency of the two machines, these two tests will not give the same results, so that by comparing them and striking an average, we can come very close to the actual efficiency of each machine.

Another way of testing when we have two motors is to use the current generated by the second machine in driving the first one. For such tests, the motors are connected with each other as shown in Figs. 223 and 224, in both of which $M$ and $M'$ represent the motors and $B$ the connecting belt. This arrangement of motors for testing is extensively used in shops where they are manufactured, its advantages being that, with a comparatively small amount of power, large motors can be tested.

In Figs. 223 and 224 the rectangle B represents a storag

battery, or any other source of current, used to provide the extra power required to drive the motor. If $M'$ is driven at the same speed as $M$, both machines being alike, the voltage developed by $M'$ will be lower than that required to maintain $M$ at the proper speed. If such is the case, a battery connected in series with the two machines, as in Fig. 223, will supply the additional voltage.

With this arrangement, if we connect voltmeters and an ammeter as indicated in Fig. 223, we shall find that the voltmeter

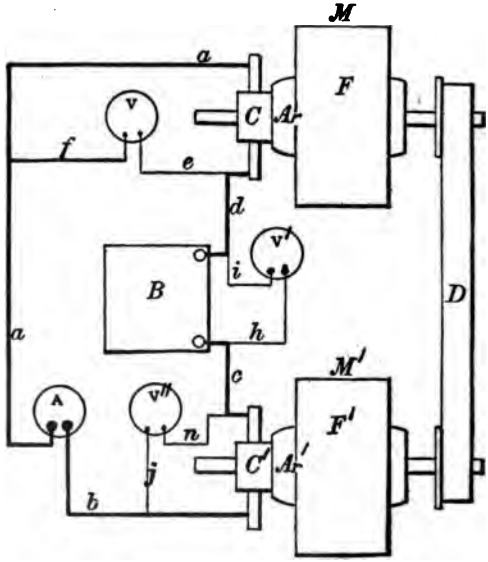


FIG. 223.

$V$ will show a higher electromotive force than $V''$, and that the difference between them will be the same as the indication of $V'$, thus showing that the battery $B$ adds its voltage to that of $M'$ so as to provide the requisite voltage to drive $M$ at the proper speed. *The voltage* indicated by instrument V' shows the loss in both *machines*, because the voltage delivered by M' is not the full *voltage* which it generates, but it is this voltage less the amount *lost within* the machine. In the same way, the voltage required

to run $M$ up to full speed is the amount required to impart to the armature this velocity plus enough to cover the loss within the machine.

In Fig. 224 the battery $B$ is connected in parallel with the generator $M'$, and in this case the voltage of both machines is made the same. This result is obtained by proportioning the sizes of the pulleys on $M$ and $M'$ so that the latter may run faster, the difference in speed being dependent upon the difference in

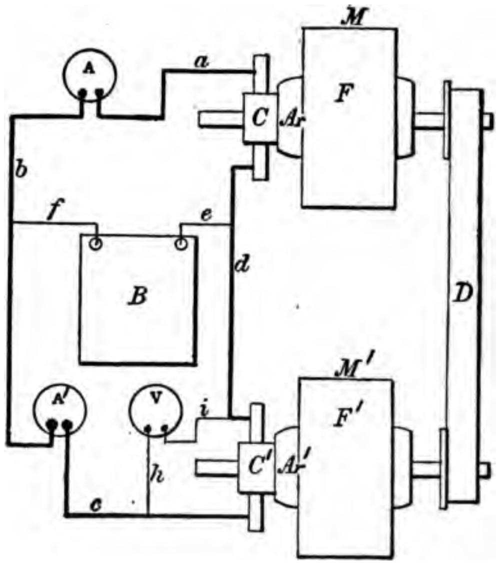


FIG. 224.

voltages at the same velocity. In this case, although $M'$ will provide the proper voltage, it will not furnish all the current required, and to make up the deficiency the battery $B$ is drawn upon. If the ammeters $A$ and $A'$ are examined, it will be found that the former indicates a considerably stronger current than the latter, the difference between the two being supplied by the battery.

If the efficiency of the motors is 90 per cent, the loss of

energy in the two machines will be about 19 per cent, and : this it will be seen that the battery *B* will have to supply about one-fifth of the current that would be required to driv if it were supplied entirely from an external source. Thus this arrangement, if we have a generator capable of develo 10 horsepower, we may use it as a substitute for the batte and be able to test motors of 50 horsepower capacity. Henc general use of this method in motor manufacturing shops.

# CHAPTER XLVI.

## TESTING ELECTRIC GENERATORS.

TESTING an electric generator is fully as simple as testing an electric motor. In fact, the only real difference is that, in the case of the motor, we measure the amount of electrical energy supplied to the machine and the amount of mechanical energy it gives back, while in the generator test we measure the mechanical energy required to drive the machine and the electrical energy it gives back. In the first case, the difference between the electrical energy absorbed and the mechanical energy given back shows the energy lost in the motor. In the second case the difference between the mechanical energy required to drive the machine and the electrical energy it gives back shows the portion lost in the generator.

In the last chapter we outlined, in connection with the explanation of Fig. 222, the general method pursued in measuring the power developed by a generator; but to make the subject quite clear we present here in Fig. 225 a diagram showing the general arrangement for a complete test. In this diagram, *S* represents a line shaft from which the generator *G* is driven through the belts *B* and *E*. This shaft *S* may be the shaft of a steam engine, or a line shaft driven from any source of power. The belt *B* runs over a pulley of a dynamometer *D*, from which the belt *E* transmits the motion to the generator, the arrangement being precisely similar to that shown in Fig. 221.

Dynamometer *D* enables us to measure the power required to drive the generator, and by means of the voltmeter *V* and the ammeter *A*, we find the electrical energy delivered to the circuit by the generator. The difference between the two amounts is the energy that is lost in the generator, and this, as in the case of a motor, is absorbed partly in the armature and partly in the field. The field loss consists of the energy absorbed in forcing the field current through the field coils, and is measured in precisely the same way as the field loss in a motor—that is,

multiplying the strength of the field current by the voltage measured across the field terminals.

Another way of finding the field loss is to measure the re-

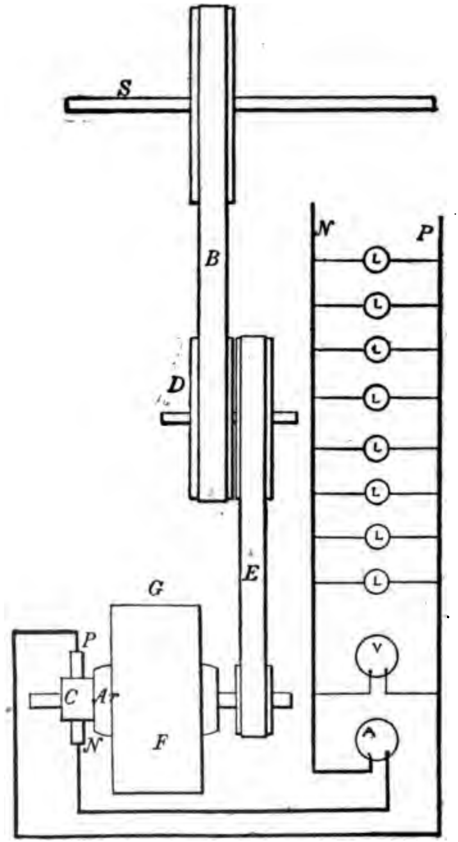


FIG. 225.

sistance of the field coils after they have become heated by a run of 2 or 3 hours, and then multiplying this resistance by the square of the field current, the product being

energy absorbed by the coils in watts. If we are not provided with an ammeter that will indicate a small current closely, we can calculate it by dividing the voltage of the generator by the resistance of the field coils, and then by multiplying the voltage by this calculated current we can get the watts lost in the field.

In the armature of a generator the losses are the same as in the armature of a motor, and consist of the energy lost in the armature coils (which loss is determined in the same way as the field coil loss), the energy lost by mechanical friction, and that due to hysteresis, which is magnetic friction. These three armature losses are substantially the same in magnitude as they are in the armature of a motor, so that, if we draw a diagram like Fig. 220, the portions that represent the three armature losses and the one field loss will be the same as in the motor diagram.

Resistances of the armature and field of the generator are obtained in the same way as in the motor, as explained in connection with Fig. 217.

In testing generators, as well as motors, considerable work can be saved if we have wattmeters, as well as ammeters and voltmeters. Thus by connecting a wattmeter in the field coil circuit we can obtain the watts lost in the field by simply reading the dial of the instrument. If we connect a wattmeter in the main circuit, we can read on its dial the watts delivered to the external circuit, and thus save the trouble of multiplying the indication of the voltmeter $V$ of Fig. 225 by the indication of the ammeter $A$. If the wattmeter is an accurate instrument, we shall be able to obtain more accurate results with it than with the ammeter and voltmeter, for the simple reason that in reading one instrument there is but one chance for making a mistake, while in reading two instruments there are two chances, and any mistake made in reading either instrument is magnified by being multiplied by the reading of the other instrument.

In the last two chapters we explained only the course to pursue in testing shunt-wound motors, and what we have said up to this point in this chapter relates only to shunt-wound generators. At the present time nearly all stationary motors are of the shunt type, but generators are as a rule compound wound. The difference between these two types, as has been explained in previo

chapters, is that the field of the compound machine is magnetized by two sets of coils, one being the regular shunt coils, the other being a set of series coils through which all the current that flows through the armature is passed.

In testing compound-wound motors, as well as compound-wound generators, all that is necessary in addition to what has been explained in connection with shunt machines, is to determine the loss of energy in the series coils, and this is easily done by measuring the resistance of these coils, when heated by a run of several hours, and then multiplying this resistance by the square of the current that passes through the coils.

If a compound-wound generator is well proportioned, it will be found that the loss of energy in the shunt coils of the field will be less than in a simple, shunt-wound generator, and that when the loss in the series coils is added to that in the shunt, the sum total will be about the same as in the simple shunt machine, or possibly a trifle less.

Motors have series coils, in some cases, and are designated as compound-wound or as differential-wound motors, depending upon the way in which the series coils are connected. If the motor is compound-wound, the series coils are connected so that the current flowing through them runs in the same direction as that in the shunt coils, and in that case the series coils help the shunt coils to magnetize the machine. If the motor is differential-wound, the series coils are so connected that the current flows through them in the opposite direction to the current flowing through the shunt coils, and in that case the series coils act in opposition to the shunt coils; that is, they demagnetize the machine, so that the net strength of the field magnets is due to the difference between the magnetizing effects of the series and the shunt coils. It is on this account that this method of connection is called a differential winding. In a compound-wound motor the effect of the series coils is to cause the speed to drop faster than with the simple shunt coils, when the load is increased. The effect of the differential winding is to cause the speed to drop less when the load is increased. The compound winding is used on motors for the purpose of giving a strong turning effort or torque with a comparatively small current. This winding is commonly for elevator motors and for other purposes where the ma

chine has to start up under full load. In such cases, a simple shunt motor will take an excessively strong current to start, because the field is comparatively weak; but if a compound winding is used, the field will be very strong because the full armature current will pass through the series field coils and thus greatly reinforce the action of the shunt coils. A shunt motor can be made so as to start up under full load with a current no greater than compound motors generally require, but if so made means must be provided to cut down the field current after starting in order to enable the motor to run up to full speed.

In a differential-wound motor, the starting current under a full load is much greater than in a simple shunt machine, because the series coils act to demagnetize the field, and on that account the torque, or rotative force of the armature, for a given strength of current is considerably reduced. The differential winding, however, will cause the motor to run at a more uniform speed, because when the load increases the field becomes weaker, and on that account the armature has to make more turns in a given time to develop the counterelectromotive force required to balance the line voltage.

This advantage of the differential winding in the way of producing more constant speed is not as great as might appear, since the series coils, while acting to reduce the voltage developed by the armature for each revolution, also act to reduce the total counter voltage required, on account of their absorbing a considerable portion of the line voltage. Because of the fact that designers are able nowadays to obtain about as close regulation of speed with the simple shunt winding as can be obtained with the differential, the latter type is seldom used in modern machines.

Between motors and generators there are some relations that can be easily explained by the aid of four simple diagrams, Figs. 226 to 229.

One of the most important things to fully understand is that there is no difference whatever in the principle of action or construction between a motor and a generator. In the actual machines there are, generally, some slight differences in the details of design, but these are made simply that each type of machine may be better adapted for the class of work it has to perform

If allowed to run free, a simple shunt-wound motor will attain a speed sufficient to cut the armature current down to a value so low that the energy passing through the armature is just enough to overcome the electrical and magnetic losses and the mechanical resistance to rotation. If, at this point, we put a belt on the pulley and apply power by means of it so as to increase the speed of the motor, the result will be that the current passing through the armature will be still further reduced, and if we continue to increase the speed, the current will keep on reducing until it becomes zero.

Current reduces as the speed is increased because the armature of the motor develops a voltage in the opposite direction to that of the line current, and this acts as a back pressure to hold

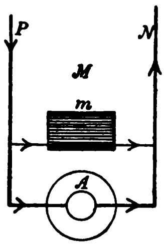


FIG 226.

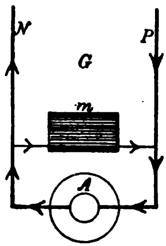


FIG. 227.

the line current back. This voltage, which is called the counter-electromotive force of the motor armature, or sometimes the back pressure, puts forth an effort to set a current flowing through the armature circuit in the opposite direction. The back pressure increases as the armature speed increases, and at a velocity slightly above that at which the motor will run free the back pressure becomes equal to the line voltage, so that the current flowing through the armature is reduced to nothing, because the two forces just balance each other.

If now the armature speed is further increased, the back pressure will become greater than the forward, or line, pressure, and as a result the armature of the motor will generate a current that will flow back into the main line. Thus it will be seen that if we increase the velocity of the motor sufficiently, we convert it into a generator.

From the foregoing it will be seen that a shunt-wound motor without any changes in the wire connections, or in the direction of rotation, becomes a generator, if we only increase the velocity at which the armature rotates. By looking at Figs. 226 and 227 it can be seen why no changes in the connections or direction of rotation are required.

In Fig. 226 it must be remembered that the machine is acting as a motor, and that the line current comes in through the positive wire *P*, hence it will branch through the shunt field coil *m* and through the armature *A* in the direction indicated by the

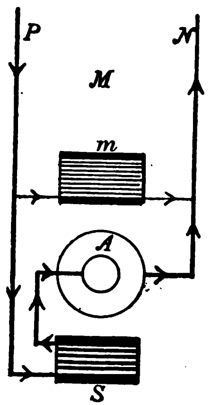

FIG. 228.

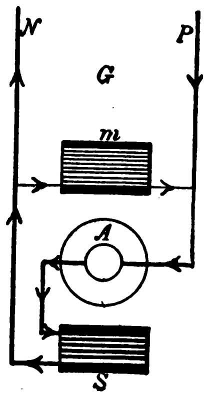

FIG. 229.

arrow heads. In Fig. 227, when the machine is acting as a generator, the current comes from the armature *A* and it flows through this in the opposite direction, being driven by the back pressure. Now this current, when it reaches the shunt field coil *m*, will flow through it in the same direction as the line current did, when the machine was running as a motor, as is clearly shown by the arrow heads; but passing out into the main current wires *P* and *N*, it will flow against the line voltage; that is, *the motor now feeds current into the main line instead of drawing from it. If the direction of rotation of the armature is reversed, when the motor is acting as a generator, no current w*

be generated unless the connections of the field coil are also reversed.

If a differential-wound motor is driven above speed by the application of power, it will become a compound-wound generator, as can be seen by comparing Figs. 228 and 229, the first showing the series coil $S$ connected so that the current flows through it in the opposite direction to that through the shunt coil $m$; that is, in the direction of a differential winding. In Fig. 229, which shows the direction of field currents through both field coils, when the machine is running as a generator, it will be seen that in both coils the direction of current is the same; hence, a differential-wound motor, when driven above speed, becomes a compound-wound generator, and conversely a compound-wound motor, when driven above speed, becomes a differential-wound generator. As in the case of the shunt-wound motor, no change is made either in the direction of rotation or the wire connections to convert the motor into a generator, a slight increase in speed being all that is required.

## CHAPTER XLVII.

### STORAGE BATTERIES.

STORAGE batteries are simply devices which transform electrical energy into chemical energy and vice-versa. They do not store electrical energy, because such a thing is impossible. Electricity is simply a force of nature; it is not a material thing that can be bottled up. To charge a storage battery an electric current is passed through it; this current produces a chemical action which leaves the contents of the battery in what may be called an unnatural chemical state, and, as a consequence, they will restore themselves to the natural state as soon as the conditions are such that they can, and in this restoration an electric current will be generated.

The amount of electrical energy put into a storage battery is more than that which can be recovered from it, because a portion of the energy is absorbed in overcoming the resistance that opposes the passage of the current. This resistance hinders the flow of current when the battery is being charged, and also when it is being discharged, so that there is a loss in both operations. If the battery is allowed to stand but a short time after being charged, and is charged and discharged at a moderate rate, the loss will not be more than 10 per cent; but if the charging and discharging are both forced—that is, if the battery is charged and discharged in a short time—the loss may be much greater, possibly as much as 50 per cent.

When a storage battery is fully discharged (in a practical sense), its energy is not entirely exhausted; it is simply run down to a point beyond which it is not advisable to carry it in practice. A storage battery might be compared to a water pail having a sponge fastened to its bottom. If the pail is filled with water and then emptied, it will not give out all that was put into it, because the sponge will soak up some of the water. If it required 10 quarts to fill it, and the sponge retained 2 quarts, then on pouring out the water only 8 quarts would be obtained. A greater amount of water could be forced out of it by squeezing the sponge. If the pail is filled the second time, it will requ

only 8 quarts because the sponge, being full, will not soak up any more; so that when emptied the second time, as much water will be poured out as was poured in.

From this it will be seen that after the first filling, all that will be lost will be the power required to fill the pail with water and to empty it. This is precisely the case with the storage battery after it is once charged; all that is lost in the successive charging and discharging is the power absorbed by the electrical resistance.

Storage battery cells have an e. m. f. of about 2 volts each. When fully charged, the voltage is about 2.1, and when discharged it is about 1.8. In practice it is found that storage battery cells do not work well when connected in parallel, owing to the fact that when so connected some of the cells will give a stronger current than the others, and thus run down sooner. On that account, the cells are made of such size that one will have all the current capacity required. Thus, if the maximum demand of the circuit is 10 amperes, the cells will be made of such size as to deliver 10 amperes, and if the demand is for 1,000 amperes, each cell will be capable of delivering that number of amperes. The voltage required is obtained by connecting a sufficient number of cells in series; for example, if the voltage required is 100, about fifty cells will be used.

Small storage batteries can be placed on shelves secured to the wall, but with batteries of the sizes ordinarily used in connection with electric lighting plants, they must be placed upon the floor or in strongly constructed racks, as they are too large and heavy to be safely held on shelving. Where floor space is not cramped, the best arrangement is to locate the cells in a single tier, but if there is a scarcity of room they can be placed two or even three tiers high, being supported by strong framing made either of iron or wood. If the framing is of iron, strong insulators must be provided to hold the cells so that they may be well insulated from the ground.

When the cells are placed directly upon the floor, wooden *stringers* are provided, as is illustrated in Figs. 230 and 231 at *A*. The first figure is a side view of a number of cells and the sec-
nd is an end view of two rows. The wooden supports should be
ums about 4 by 8 inches, set on edge, and should be well im-

pregnated with oil or paraffin to make them water proof. In addition to this treatment, they must be covered with a good coating of coal tar, so that they may not be affected by the acid that is likely to be dropped upon them from time to time. The plates

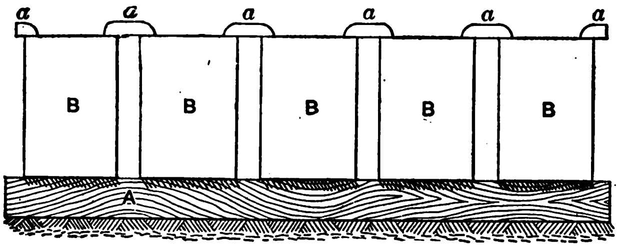


FIG. 230.

in the cells are provided with lugs by means of which they are connected with the plates of adjoining cells; and the distance between the cells must be such that these lugs may be properly connected, as is shown at *a a* in Fig. 230.

If the length of the room is such that all the cells required

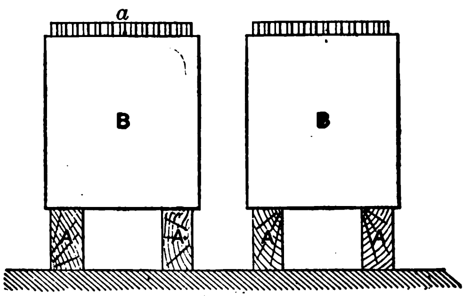


FIG. 231.

can be placed in two rows, they can be arranged with a passageway between them; that is, one row on each side of the room, or they can be placed in the center of the room with a passage on each side. The first arrangement is the more desirable, if the room is narrow. If the room is wide and short, so that the c

have to be placed in more than two rows, then they should be set in pairs of rows, with a passageway between each pair.

Storage batteries are used to increase the voltage when for any reason it is required to feed a current of higher e. m. f. than the normal into some branch of the circuit. For example, suppose that in a lighting plant where the normal voltage is 110 it is desired to have a current of 150 volts for some particular purpose; then a storage battery capable of furnishing the extra 40 volts is provided and the generator current is passed through the battery so that the voltage of the latter may be added to it. And in this way the 110 volts of the generator, plus the 40 volts of the battery, will give the 150 volts required. If the high-voltage current is not required all the time, the battery is charged by the generator while the high-voltage circuit is shut down. If the high-voltage current is required during all the time the plant is running, or for nearly all the time, two sets of batteries will be used, and one will be charged while the other one is being used.

The most common and profitable use to which storage batteries are put is as a help to the generators. To illustrate their advantage in such cases, suppose that we have a lighting plant used in a factory to furnish light for an hour or less in the morning, and a similar length of time in the evening. Let the maximum number of lights used be one thousand; then it is evident that a generator of one thousand-light capacity must be installed, and power sufficient to drive it must be provided. If the lights are used for 1 hour in the morning and 1 hour in the evening, the generator will be in service for only 2 hours out of the 10 If a storage battery is provided, and this is charged during the remaining 8 hours, it will have to be charged at a rate only slightly more than two hundred and fifty lights; for to feed this number of lights for 8 hours will require just the same amount of energy as to feed four times the number for 2 hours. This being the case, with the help of the storage battery a generator of three hundred-light capacity will be sufficient to do the work, and the steam engine capacity will be reduced in like proportion.

In nearly all the large electric lighting stations, storage batteries are used. Old stations that were not provided originally with batteries install them when the demand for lights become so great that they cannot meet it with the generators running

to full capacity. In all lighting stations the demand for lights is not uniform throughout the 24 hours. It is heavy from 5 to 11 o'clock in the evening and from about 6 to 8 o'clock in the morning. During the day hours it is light, and from midnight to 6 in the morning still lighter.

During the hours of light demand, the storage battery is charged, and when the heavy load comes on, the battery is connected so as to discharge into the circuit and help the generators. In this way the capacity of the station is considerably increased, for to the maximum capacity of the generators is added the capacity of the battery. Another advantage of the battery is that, if for any reason the generators have to be shut down for a half hour or so, the battery can furnish the current, and thus avoid extinguishing the lights.

Diagrams 232 and 233 show the way in which batteries are connected so as to be used to assist the generators in supplying a system of lighting for either a private or public plant. In both these arrangements the battery can be charged while the lamp circuits are being fed, and when it is charged it can be connected to the lamp circuits and work together with the generator or alone, as the case may require.

As stated in the foregoing, the voltage of battery cells varies from about 2.1 down to 1.8 volts, between full charge and discharge. Owing to this change in the voltage, the number of cells connected in series will have to be more when the battery is nearly discharged than when it is fully charged, so as to keep the line voltage up to the proper point. In charging a battery the voltage of the charging current has to be increased as the charging progresses, so as to force a current through the cells against their constantly increasing voltage. On this account the number of cells connected in series has to be reduced as the charging increases, otherwise the generator electromotive force would not be able to set up current to charge the battery.

To obtain the necessary adjustment the battery is divided into two parts, one called the main battery, which is shown at *B* in the diagrams, and the other, the end regulating cells, shown at *B'*.

In both the diagrams the generator is represented by A and *M*, the former being the armature, and the latter the field coil

and $R$ is the field regulator. At $A'$ an ammeter is placed to indicate the strength of the generator current, and at $A''$ is another ammeter that indicates the strength of the current flowing through the battery. The double throw switch $g$ is for the pur-

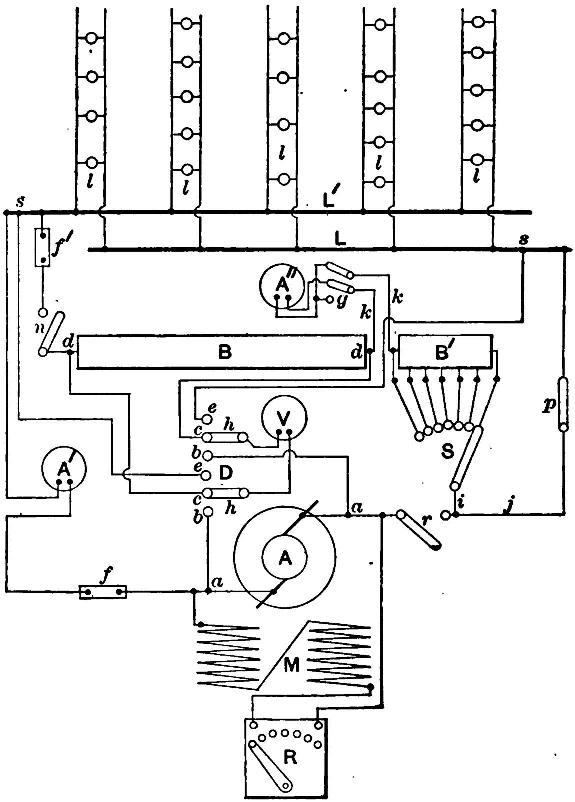


FIG. 232.

pose of reversing the current through A" when the battery is being charged, but if an instrument is used which indicates with 'rrent flowing in either direction, this switch is not require' *Fig.* 232, *V* is a voltmeter which, by means of the switch

can be connected with the generator, the battery or the bus bars $L$ $L'$, and thus show the voltage of any of these. In Fig. 233, three voltmeters are provided, which is a more con-

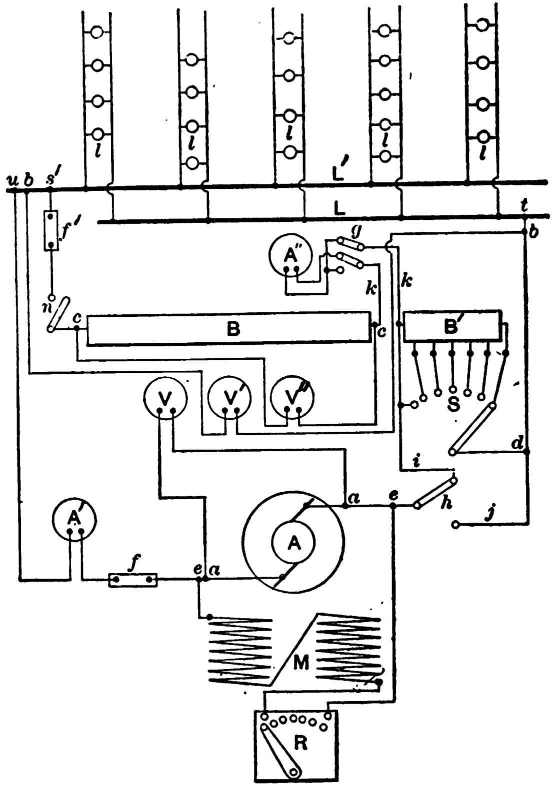


FIG. 233.

venient but more expensive arrangement. The safety fuses or circuit breakers are shown at $f$ and $f'$.

*In Fig. 232, if* the switch $r$ is open, as shown, the circuit will *be fed from the* battery; by moving the switch S, more or less of *the regulating* cells in $B'$ can be placed in the circuit so as

obtain the proper voltage. When the switch *r* is closed, the generator will send a current into the circuit, and if switch *S* is now turned far enough to the left the generator current will be forced through the battery and will charge it, provided switch *n* is closed. The current passing through the battery from the generator will reach bus *L'* and from there return to the generator. By moving switch *S* far enough to the right, the number of end regulating cells in *B'* added to the battery can be made sufficient to cause the battery voltage to equal that of the generator, and then the battery current will join that from the generator and flow out to the lamps. Thus it will be seen that by changing the position of switch *S* the battery can be either charged or discharged while the generator is feeding the lamps.

The difference between Figs. 232 and 233 is in the way in which the end-regulating cells are connected in the circuit. In the latter figure, with switch *h* in the position shown and switch *n* closed, the generator current will have to pass through all the end cells *B'* to reach the lamp circuits; while by passing through the main battery *B* it can return to the starting point. From this it will be seen that by moving the switch *S* so as to increase or decrease the number of cells in *B'* the proportion of current passing through the battery and out to the lamps can be varied. When switch *h* is turned so as to connect with *j*, the generator current will pass out directly to the line the same as when switch *r* in Fig. 232 is closed. In either arrangement, the current flowing through the battery can be adjusted by the movement of switch *S*.

3( 2a

# INDEX.

## A.

D.

## I.



## L.



## M.

*For Index to Part I. see end of Part I.*